BC1-3504-7420

45° Panel socket

Product code: BC1-3504-7420

IP rating **IP67**	Current (source notation) **32A**
Voltage **380V-450V**	Poles **3P+E**



Specification	Value
Product code	BC1-3504-7420
Barcode	8698523905555
IP rating	IP67
Current (source notation)	32A
Voltage	380V-450V
Frequency	50Hz - 60Hz
Poles	3P+E
Housing material	polyamide 6
Conductor material	MS 58
Weight (g)	302,3
Box quantity	4
Carton quantity	72

Technical drawing

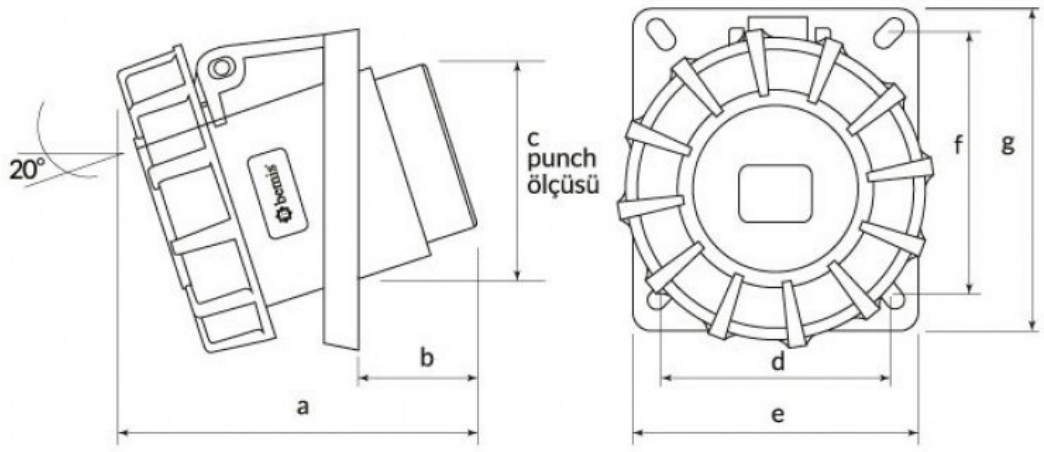

Ölçüler / Dimensions (mm)			
a	107	e	91
b	42	f	82
c	80	g	100
d	77	h	

Technical values reflect the current product catalogue. Contact Bemis for installation documentation and confirmation of application suitability.