BC1-3504-7413

Panel socket

Product code: BC1-3504-7413

IP rating	Current (source notation)
IP67	**32A**
Voltage	Poles
380V-450V	**3P+E**



Specification	Value
Product code	BC1-3504-7413
Barcode	8698523905548
IP rating	IP67
Current (source notation)	32A
Voltage	380V-450V
Frequency	50Hz - 60Hz
Poles	3P+E
Housing material	polyamide 6
Conductor material	MS 58
Weight (g)	238,9
Box quantity	4
Carton quantity	72

Technical drawing

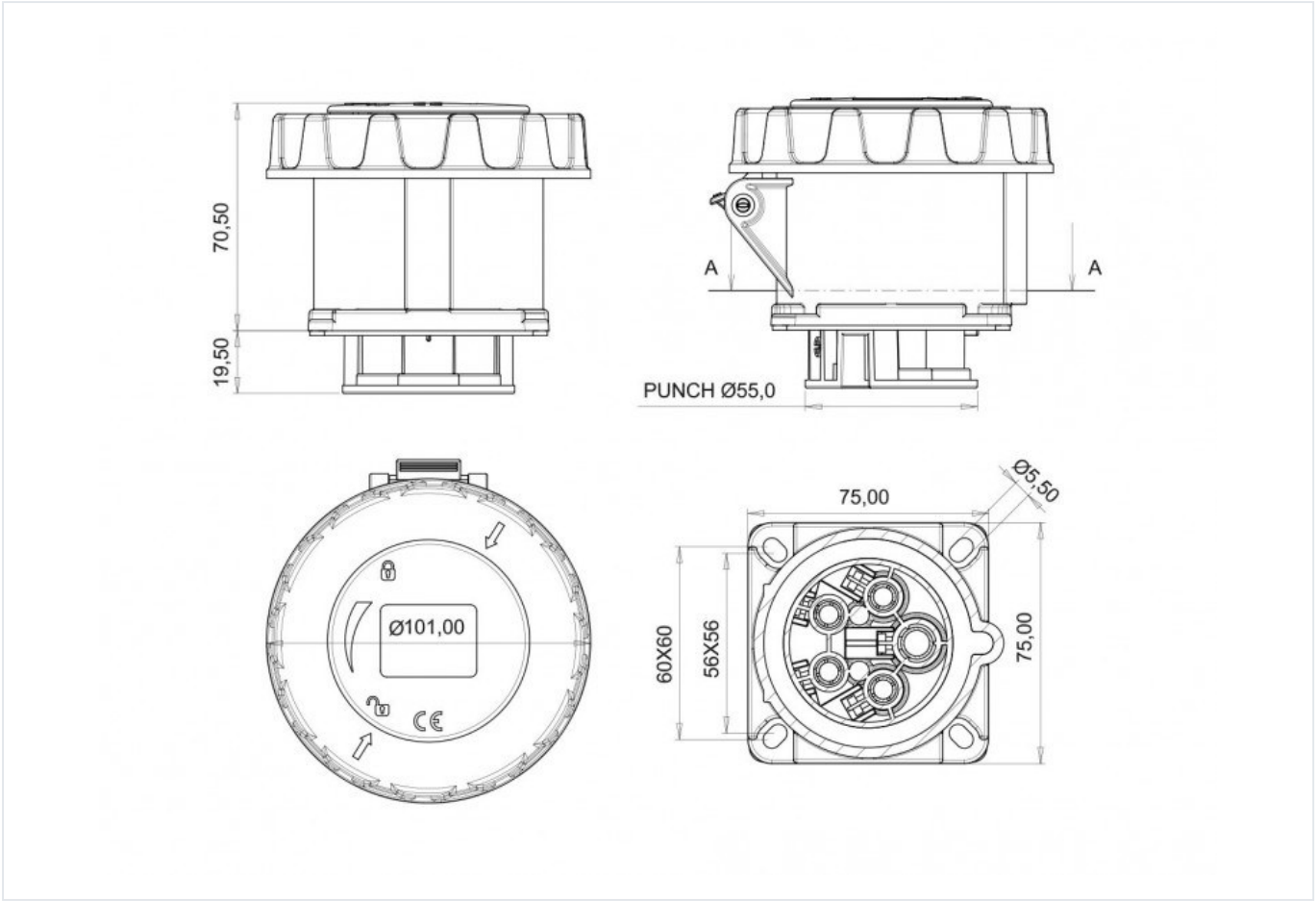

Technical values reflect the current product catalogue. Contact Bemis for installation documentation and confirmation of application suitability.