BC1-3504-7312

Cable connector

Product code: BC1-3504-7312

IP rating **IP67**	Current (source notation) **32A**
Voltage **380V-450V**	Poles **3P+E**

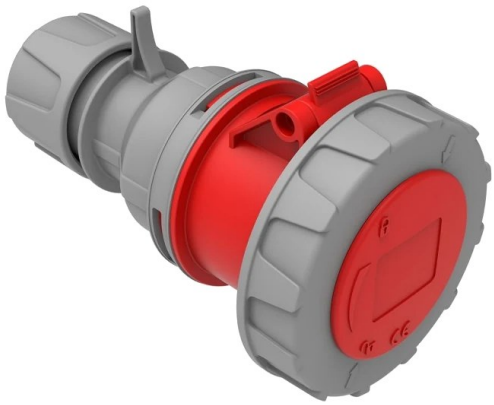

Specification	Value
Product code	BC1-3504-7312
Barcode	8698523905531
IP rating	IP67
Current (source notation)	32A
Voltage	380V-450V
Frequency	50Hz - 60Hz
Poles	3P+E
Housing material	polyamide 6
Conductor material	MS 58
Weight (g)	311,1
Box quantity	3
Carton quantity	54

Technical drawing

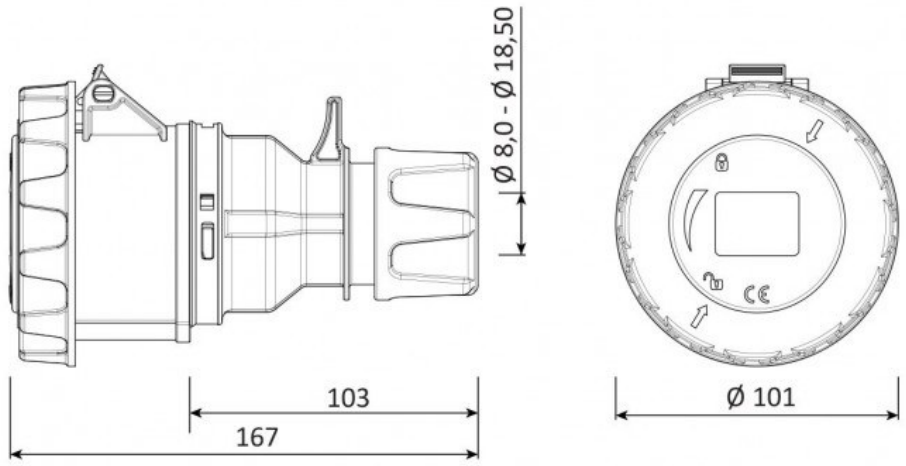

Technical values reflect the current product catalogue. Contact Bemis for installation documentation and confirmation of application suitability.