BC1-3403-7510

Wall socket

Product code: BC1-3403-7510

IP rating **IP67**	Current (source notation) **32A**
Voltage **220V-250V**	Poles **2P+E**



Specification	Value
Product code	BC1-3403-7510
Barcode	8698523905654
IP rating	IP67
Current (source notation)	32A
Voltage	220V-250V
Frequency	50Hz - 60Hz
Poles	2P+E
Housing material	polyamide 6
Conductor material	MS 58
Weight (g)	364
Box quantity	2
Carton quantity	36

Technical drawing

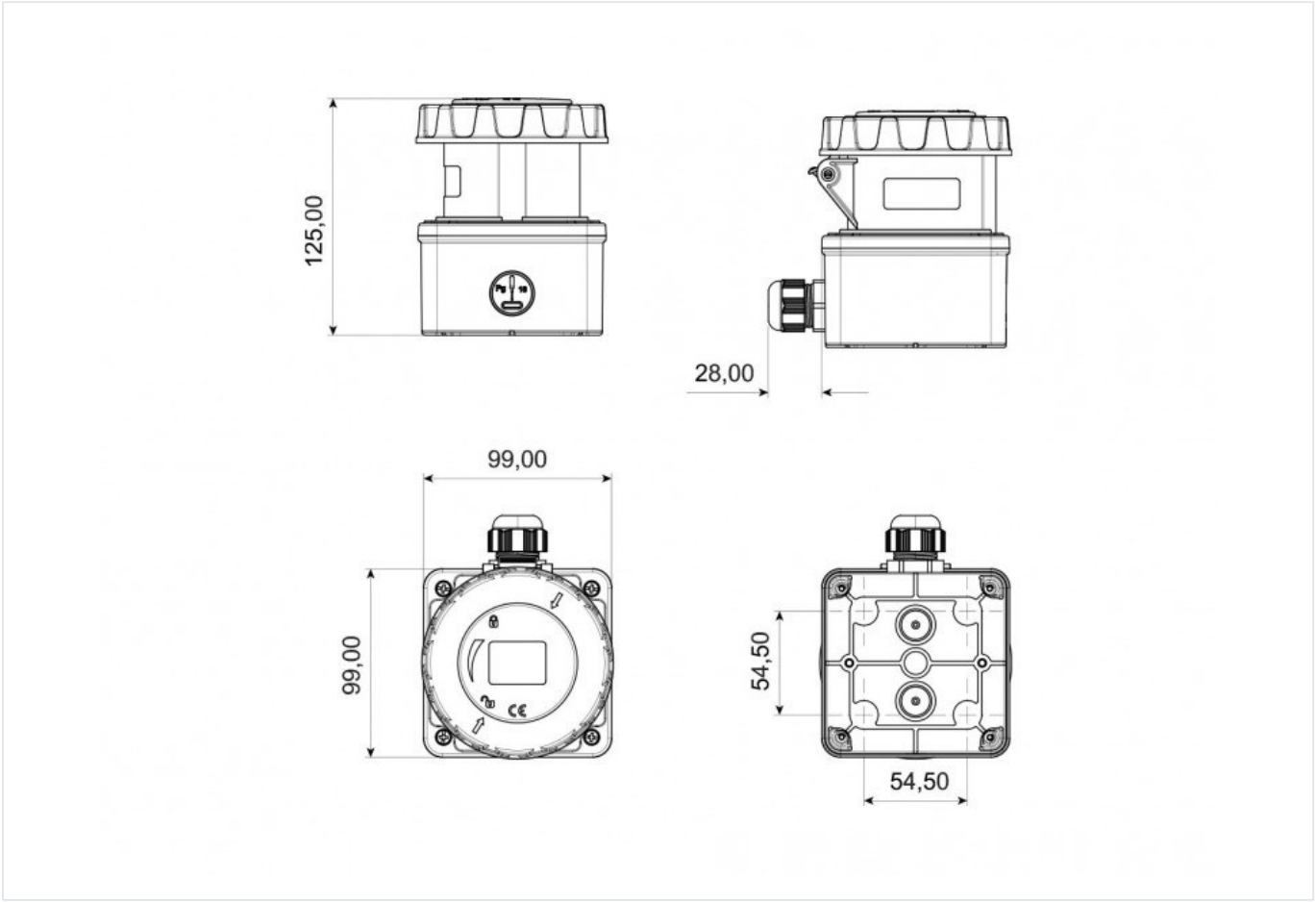

Technical values reflect the current product catalogue. Contact Bemis for installation documentation and confirmation of application suitability.