BC1-3403-7114

Appliance inlet

Product code: BC1-3403-7114

IP rating **IP67**	Current (source notation) **32A**
Voltage **220V-250V**	Poles **2P+E**

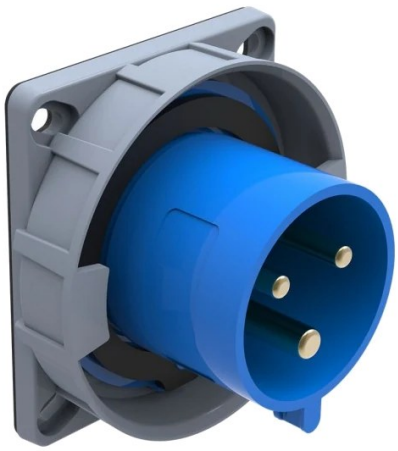

Specification	Value
Product code	BC1-3403-7114
Barcode	8698523902929
IP rating	IP67
Current (source notation)	32A
Voltage	220V-250V
Frequency	50Hz - 60Hz
Poles	2P+E
Housing material	polyamide 6
Conductor material	MS 58
Weight (g)	195,7
Box quantity	6
Carton quantity	108

Technical drawing

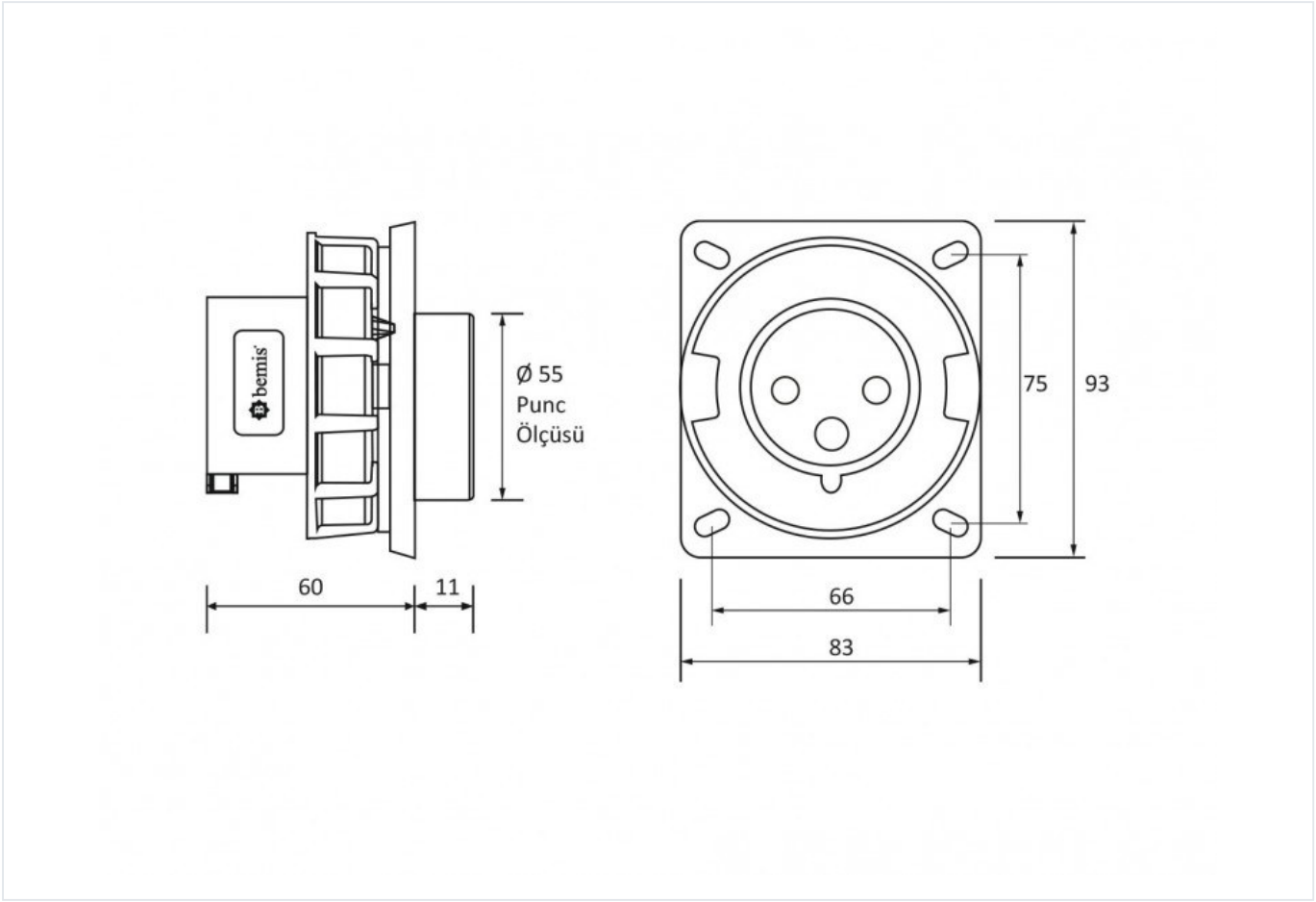

Technical values reflect the current product catalogue. Contact Bemis for installation documentation and confirmation of application suitability.