BC1-3403-2420

45° Panel socket

Product code: BC1-3403-2420

IP rating **IP44**	Current (source notation) **32A**
Voltage **220V-250V**	Poles **2P+E**

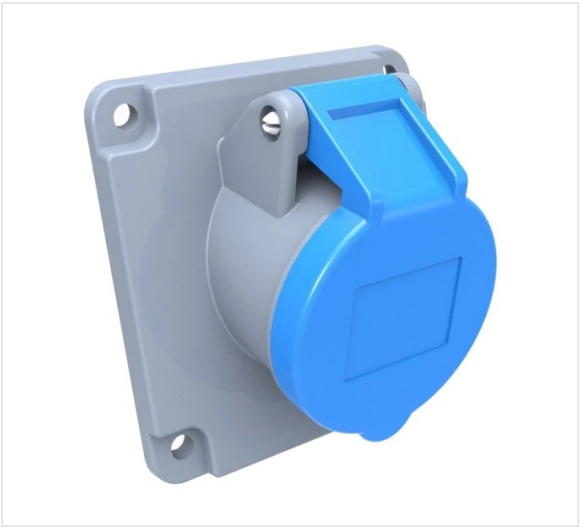

Specification	Value
Product code	BC1-3403-2420
Barcode	8698523900963
IP rating	IP44
Current (source notation)	32A
Voltage	220V-250V
Frequency	50Hz - 60Hz
Poles	2P+E
Housing material	polyamide 6
Conductor material	MS 58
Weight (g)	234,6
Box quantity	6
Carton quantity	108

Technical drawing

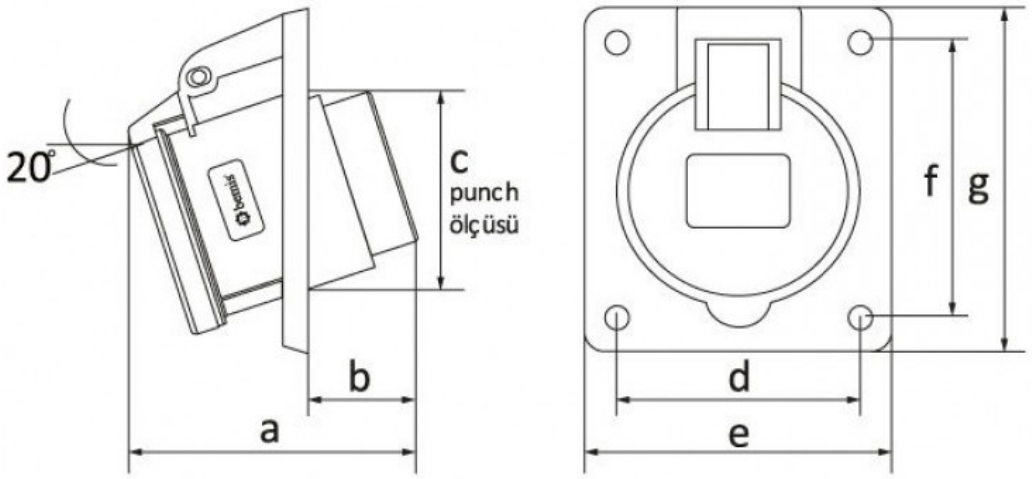

Ölçüler / Dimensions (mm)			
a	102	e	91
b	42	f	82
c	80	g	100
d	77	h	

Technical values reflect the current product catalogue. Contact Bemis for installation documentation and confirmation of application suitability.