BC1-3303-2413

Panel socket (75x75)

Product code: BC1-3303-2413

IP rating	Current (source notation)
IP44	**3/32A**
Voltage	Poles
110V-150V	**2P+E**

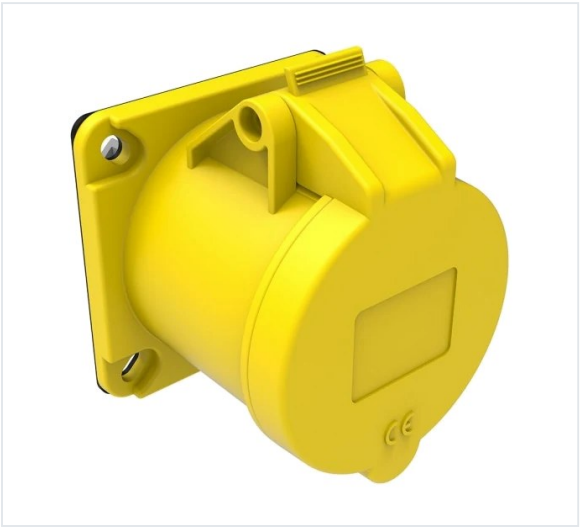

Specification	Value
Product code	BC1-3303-2413
Barcode	8698523930953
IP rating	IP44
Current (source notation)	3/32A
Voltage	110V-150V
Frequency	50Hz - 60Hz
Poles	2P+E
Housing material	polyamide 6
Conductor material	MS 58
Weight (g)	195
Box quantity	8
Carton quantity	96

Technical drawing

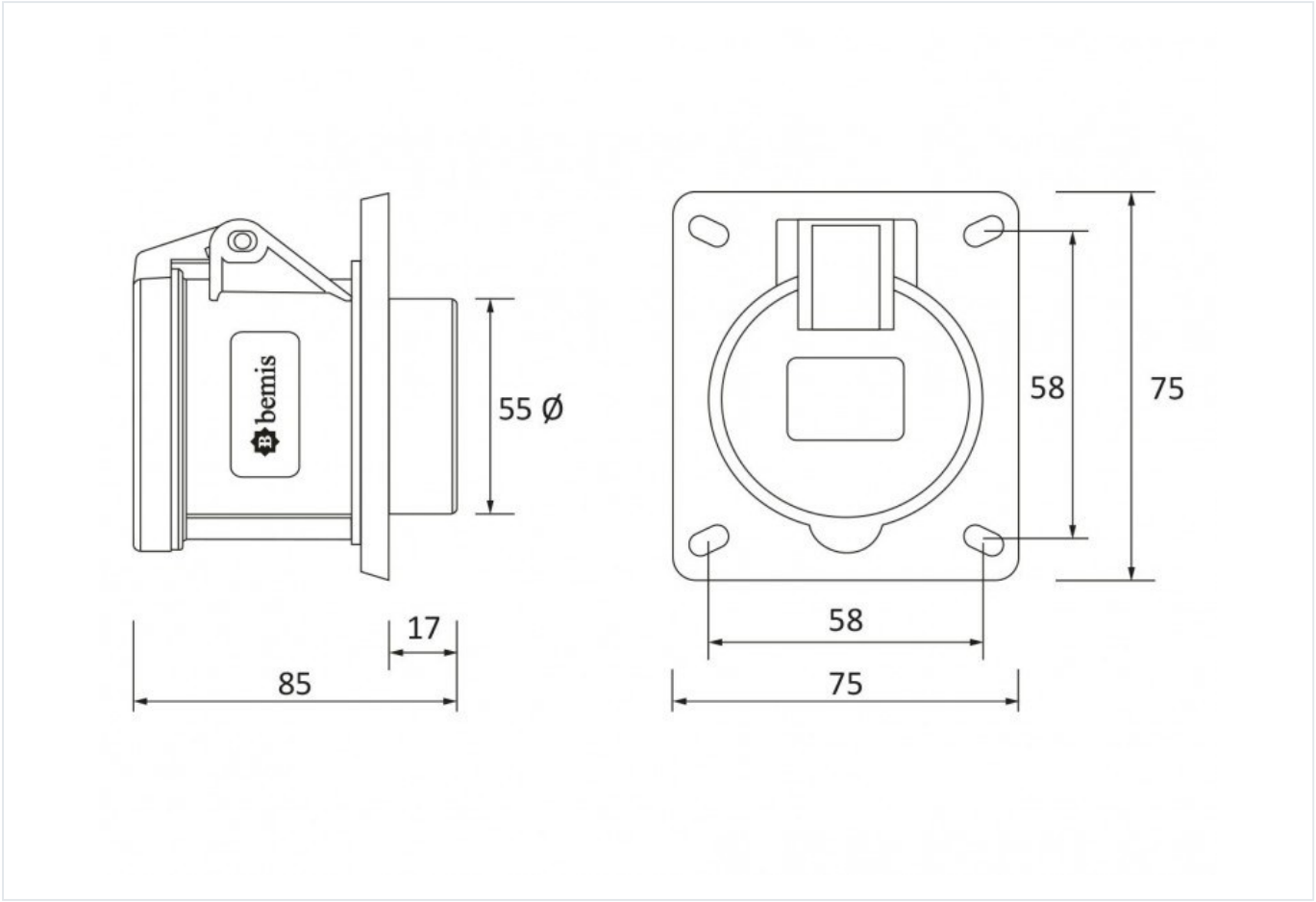

Technical values reflect the current product catalogue. Contact Bemis for installation documentation and confirmation of application suitability.