BC1-1505-7440

Socket with fixing nut

Product code: BC1-1505-7440

IP rating **IP67**	Current (source notation) **5/16A**
Voltage **380V-450V**	Poles **3P+E+N**



Specification	Value
Product code	BC1-1505-7440
Barcode	8698523900611
IP rating	IP67
Current (source notation)	5/16A
Voltage	380V-450V
Frequency	50Hz - 60Hz
Poles	3P+E+N
Housing material	polyamide 6
Conductor material	MS 58
Weight (g)	-
Box quantity	6
Carton quantity	108

Technical drawing

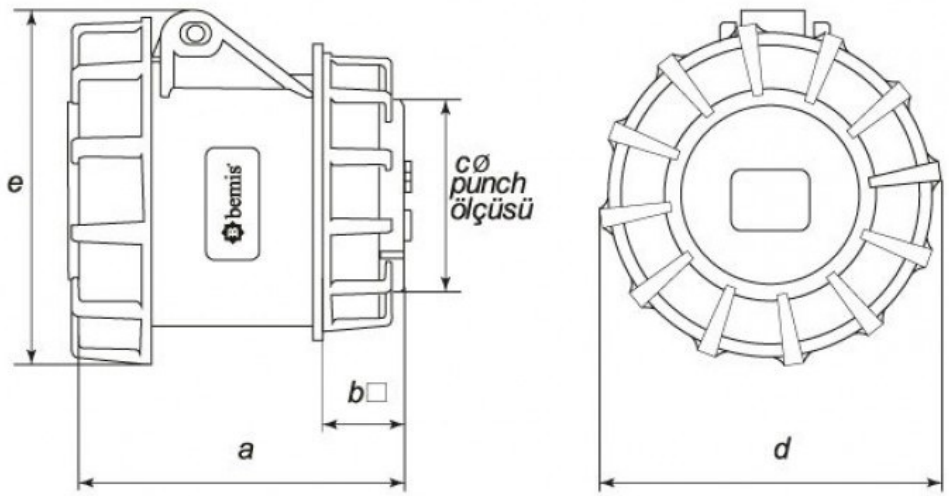

Ölçüler / Dimensions (mm)			
a	70	e	90
b□	15	f	
cø	70	g	
d	86	h	

Technical values reflect the current product catalogue. Contact Bemis for installation documentation and confirmation of application suitability.