BC1-1504-7236

# 90° Wall inlet

Product code: BC1-1504-7236

IP rating
**IP67**

Voltage
**380V-450V**

Poles
**3P+E**



| Specification | Value |
|---|---|
| Product code | BC1-1504-7236 |
| Barcode | 8698523907603 |
| IP rating | IP67 |
| Voltage | 380V-450V |
| Frequency | 50Hz - 60Hz |
| Poles | 3P+E |
| Housing material | polyamide 6 |
| Conductor material | MS 58 |
| Weight (g) | 282 |
| Box quantity | 3 |
| Carton quantity | 54 |

## Technical drawing

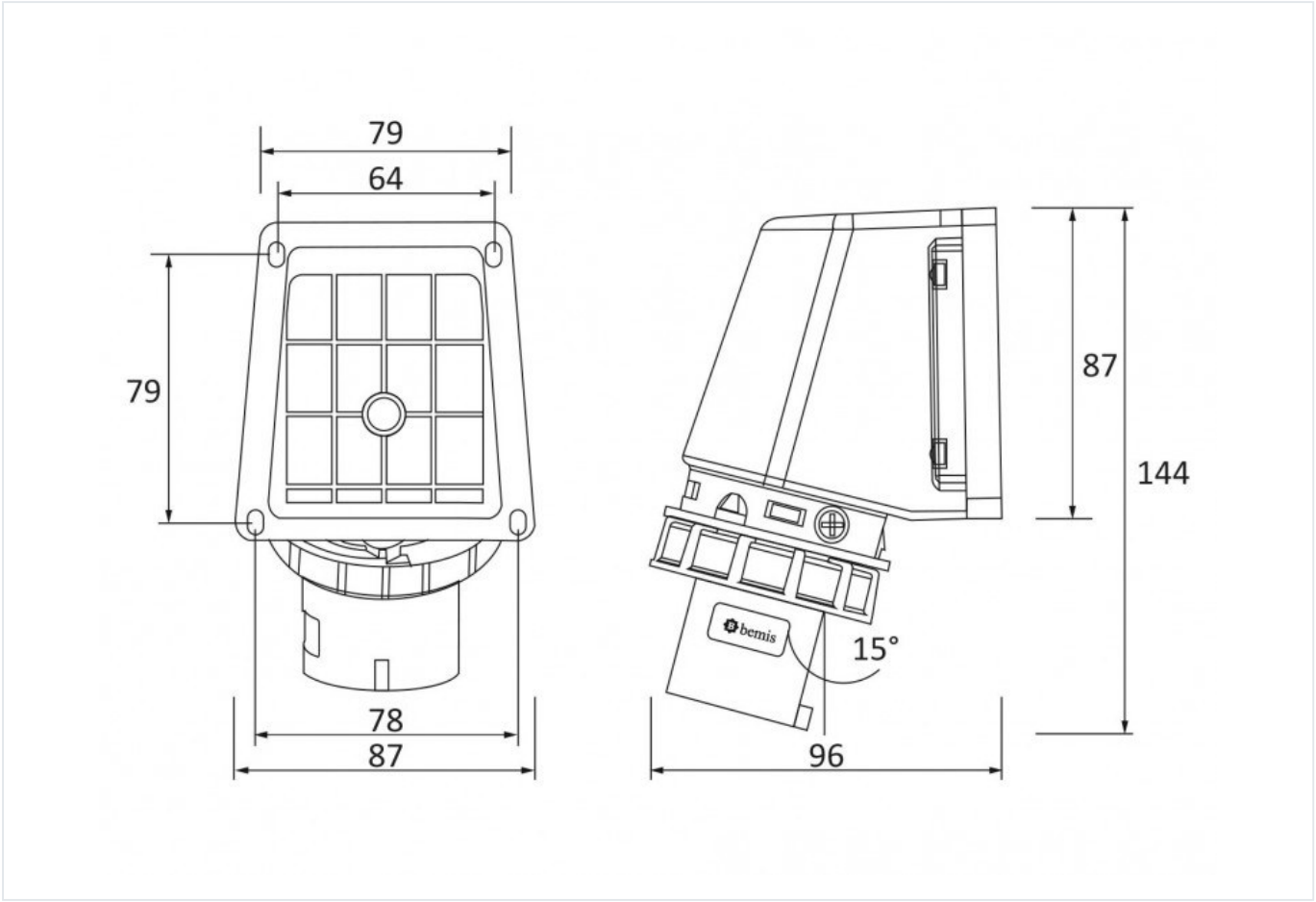


Technical values reflect the current product catalogue. Contact Bemis for installation documentation and confirmation of application suitability.