BC1-1504-7114

Appliance inlet

Product code: BC1-1504-7114

IP rating
IP67

Voltage
380V-450V

Poles
3P+E



Specification	Value
Product code	BC1-1504-7114
Barcode	8698523907580
IP rating	IP67
Voltage	380V-450V
Frequency	50Hz - 60Hz
Poles	3P+E
Housing material	polyamide 6
Conductor material	MS 58
Weight (g)	135
Box quantity	10
Carton quantity	180

Technical drawing

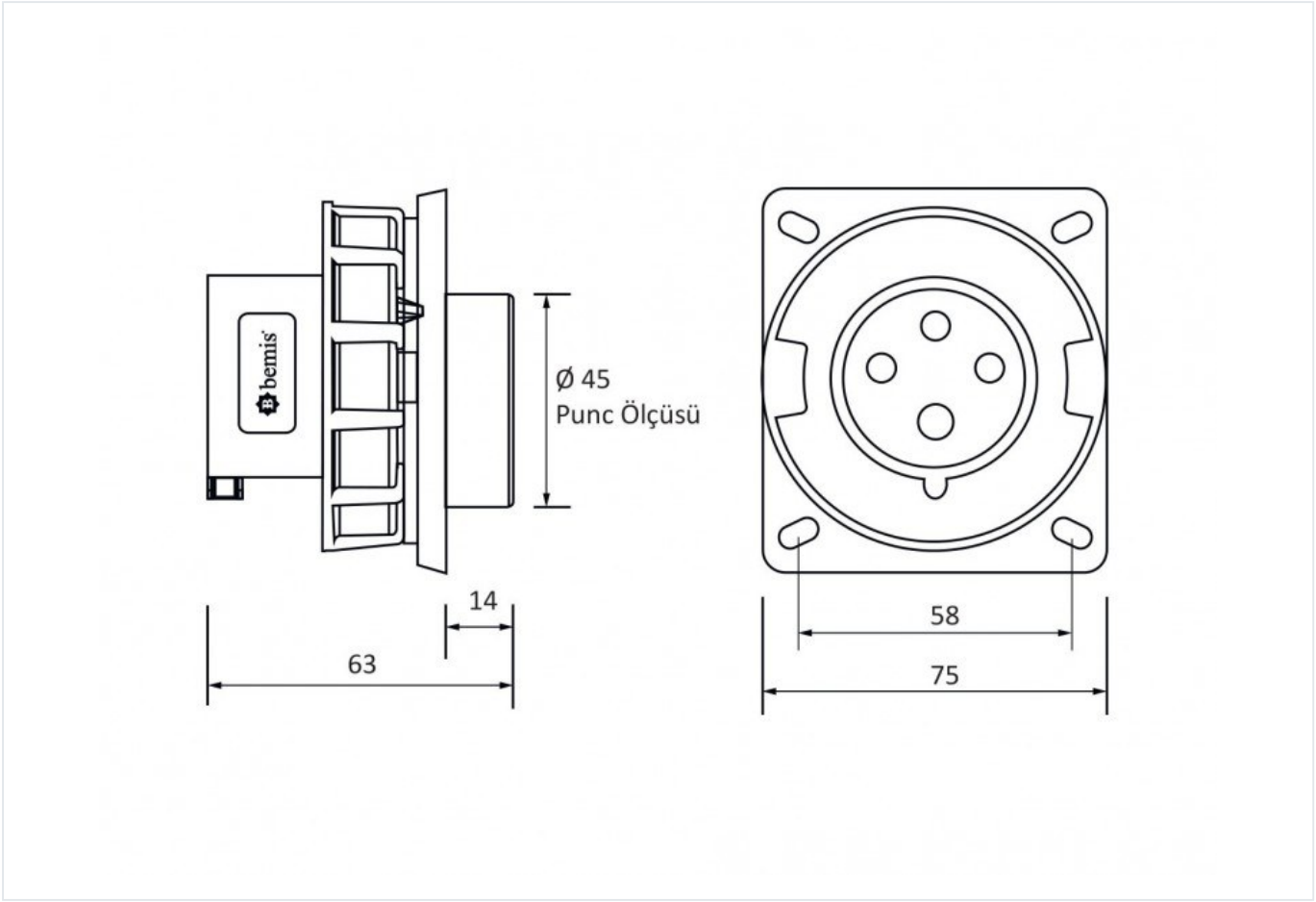

Technical values reflect the current product catalogue. Contact Bemis for installation documentation and confirmation of application suitability.