BC1-1504-7312

Cable connector

Product code: BC1-1504-7312

IP rating
IP67

Voltage
380V-450V

Poles
3P+E

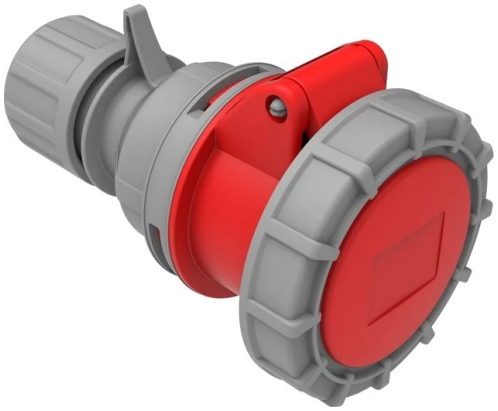

Specification	Value
Product code	BC1-1504-7312
Barcode	8698523910429
IP rating	IP67
Voltage	380V-450V
Frequency	50Hz - 60Hz
Poles	3P+E
Housing material	polyamide 6
Conductor material	MS 58
Weight (g)	214,3
Box quantity	6
Carton quantity	108

Technical drawing

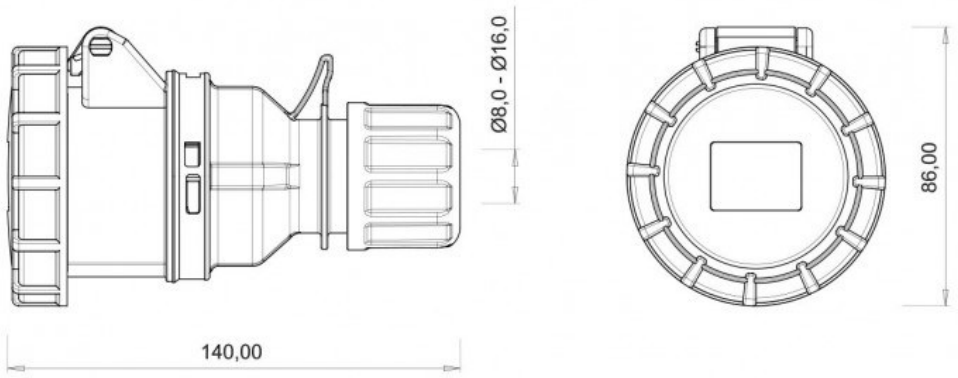

Technical values reflect the current product catalogue. Contact Bemis for installation documentation and confirmation of application suitability.