BC1-1504-2535

90° Wall socket

Product code: BC1-1504-2535

IP rating
IP44

Voltage
380V-450V

Poles
3P+E



Specification	Value
Product code	BC1-1504-2535
Barcode	8698523910306
IP rating	IP44
Voltage	380V-450V
Frequency	50Hz - 60Hz
Poles	3P+E
Housing material	polyamide 6
Conductor material	MS 58
Weight (g)	260
Box quantity	3
Carton quantity	54

Technical drawing

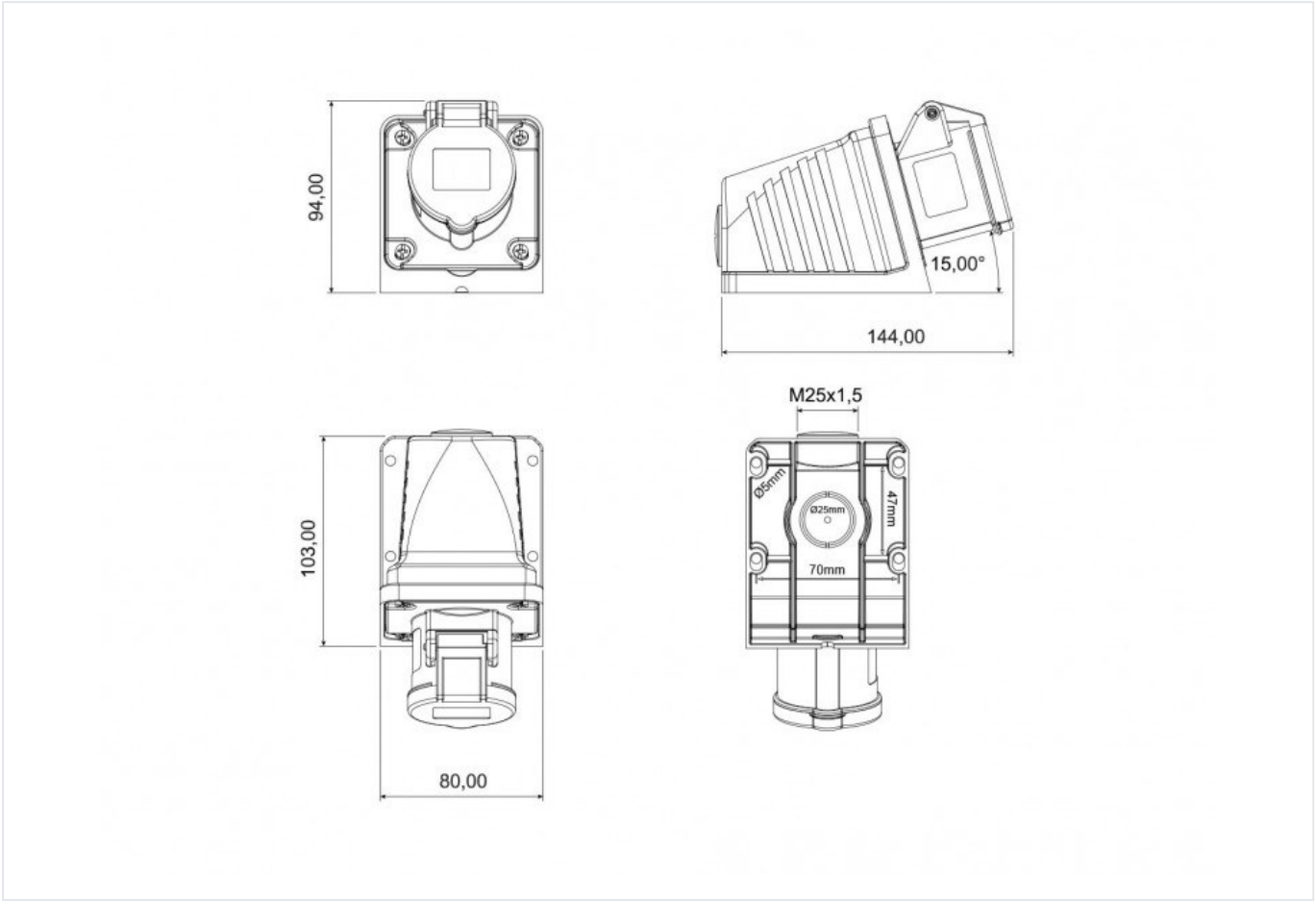

Technical values reflect the current product catalogue. Contact Bemis for installation documentation and confirmation of application suitability.