BC1-1504-2235

Wall inlet (with spring-loaded lid) — 90°

Product code: BC1-1504-2235

IP rating	Voltage
IP44	**380V-450V**

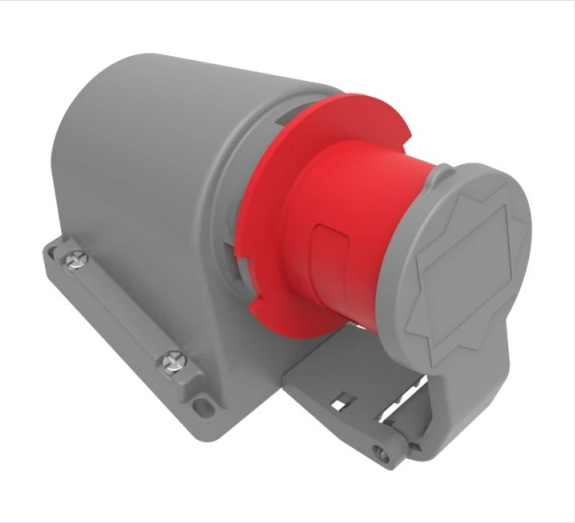

Specification	Value
Product code	BC1-1504-2235
Barcode	8698523909362
IP rating	IP44
Voltage	380V-450V
Frequency	50Hz - 60Hz
Poles	3P+E
Housing material	polyamide 6
Conductor material	MS 58
Weight (g)	252,9
Box quantity	6
Carton quantity	72

Technical drawing

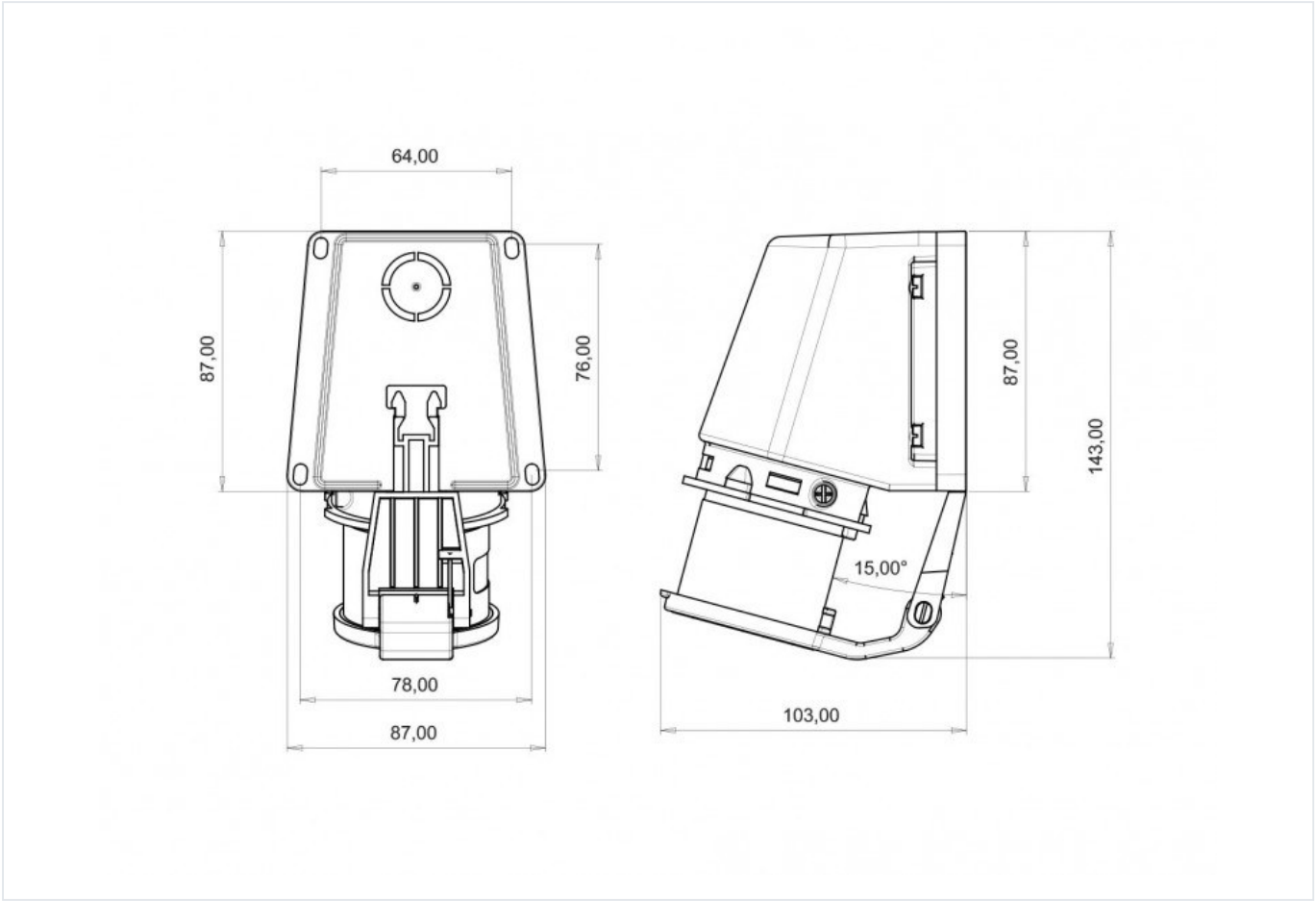

Technical values reflect the current product catalogue. Contact Bemis for installation documentation and confirmation of application suitability.