BC1-1504-2210

Wall inlet

Product code: BC1-1504-2210

IP rating	Voltage
IP44	**380V-450V**

Poles
3P+E



Specification	Value
Product code	BC1-1504-2210
Barcode	8698523907573
IP rating	IP44
Voltage	380V-450V
Frequency	50Hz - 60Hz
Poles	3P+E
Housing material	polyamide 6
Conductor material	MS 58
Weight (g)	162
Box quantity	6
Carton quantity	108

Technical drawing

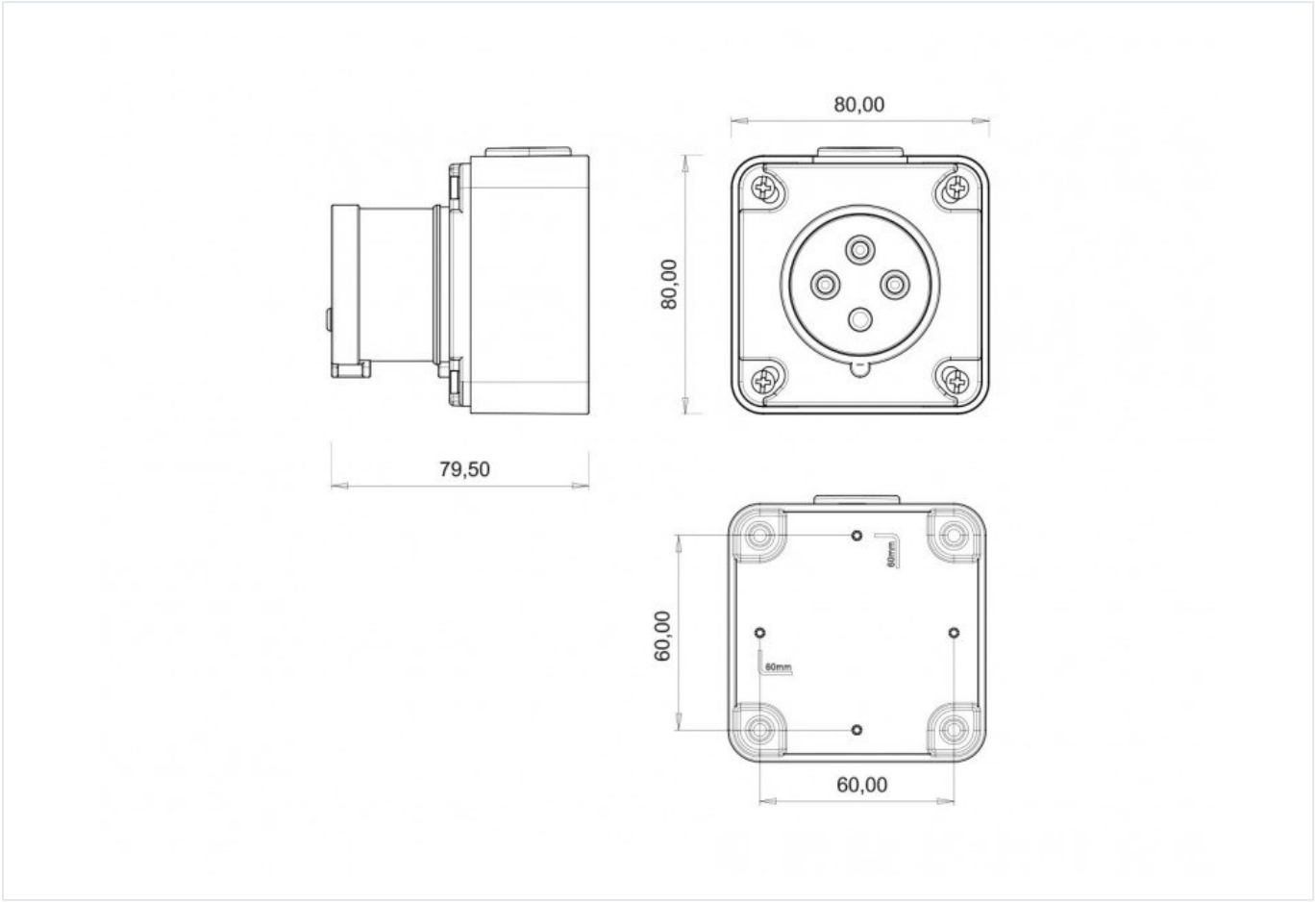

Technical values reflect the current product catalogue. Contact Bemis for installation documentation and confirmation of application suitability.