BC1-1504-2114

Appliance inlet

Product code: BC1-1504-2114

IP rating
IP44

Voltage
380V-450V

Poles
3P+E



Specification	Value
Product code	BC1-1504-2114
Barcode	8698523910221
IP rating	IP44
Voltage	380V-450V
Frequency	50Hz - 60Hz
Poles	3P+E
Housing material	polyamide 6
Conductor material	MS 58
Weight (g)	107,2
Box quantity	10
Carton quantity	180

Technical drawing

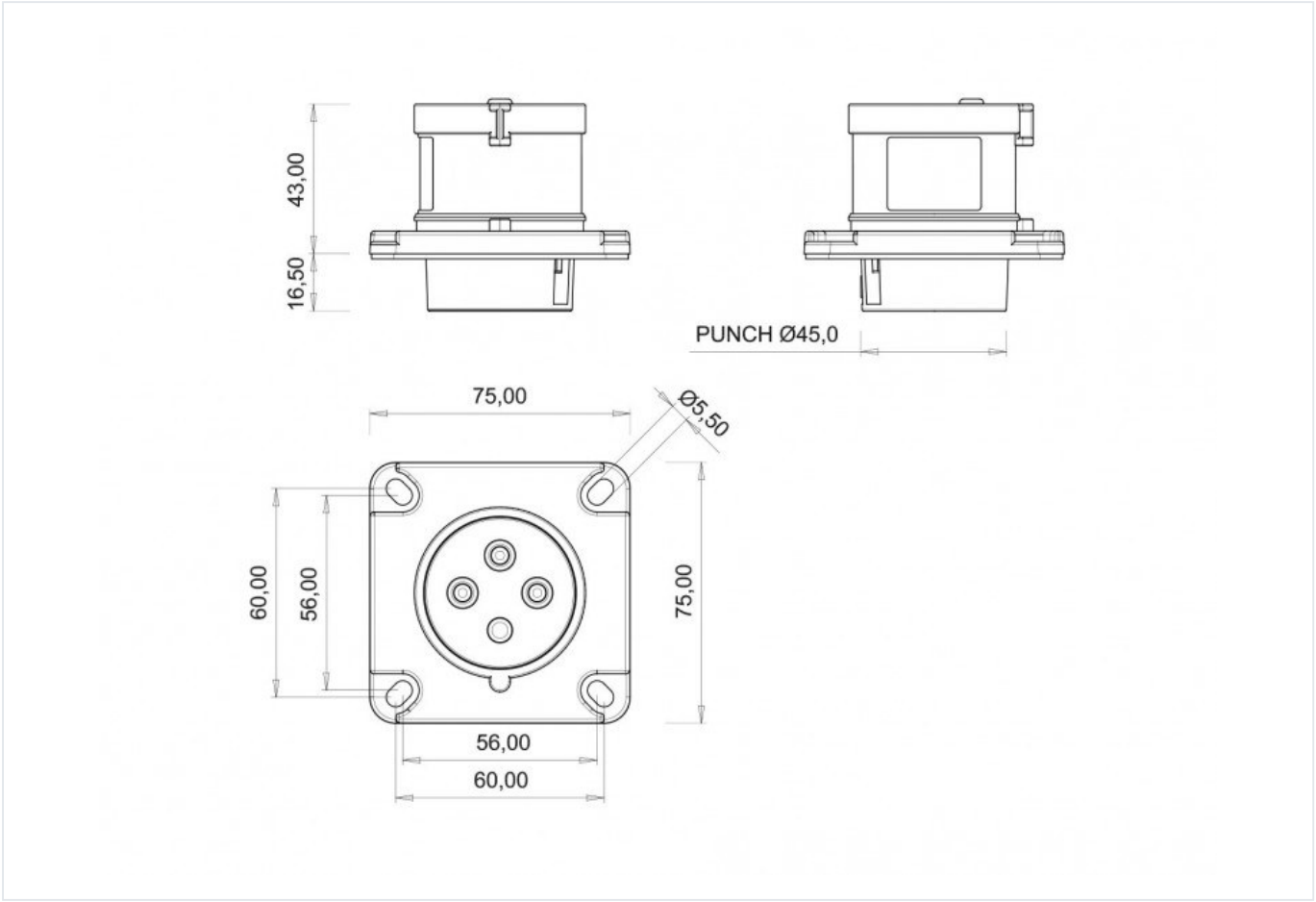

Technical values reflect the current product catalogue. Contact Bemis for installation documentation and confirmation of application suitability.