BC1-1504-2312

Cable connector

Product code: BC1-1504-2312

IP rating	Voltage
IP44	**380V-450V**

Poles
3P+E

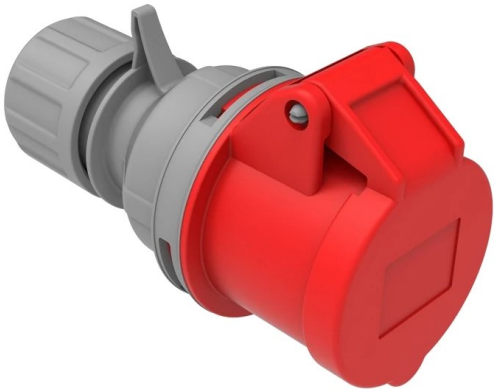

Specification	Value
Product code	BC1-1504-2312
Barcode	8698523910245
IP rating	IP44
Voltage	380V-450V
Frequency	50Hz - 60Hz
Poles	3P+E
Housing material	polyamide 6
Conductor material	MS 58
Weight (g)	187,4
Box quantity	8
Carton quantity	144

Technical drawing

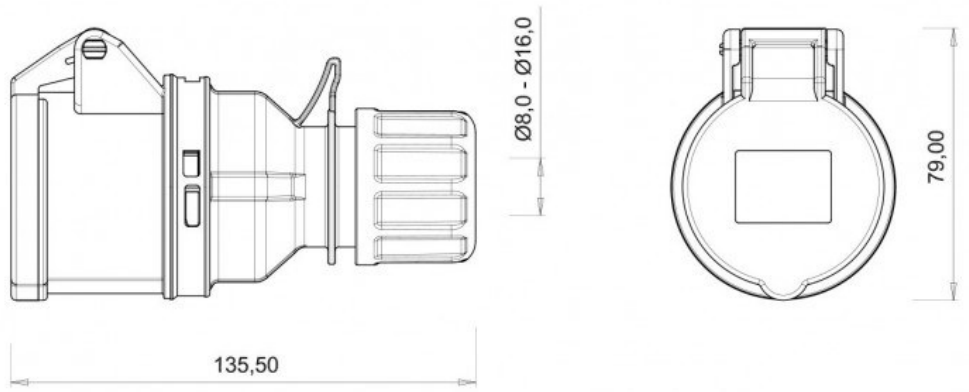

Technical values reflect the current product catalogue. Contact Bemis for installation documentation and confirmation of application suitability.