BC1-1403-7510

Wall socket

Product code: BC1-1403-7510

IP rating	Voltage	Poles
IP67	**220V-250V**	**2P+E**



Specification	Value
Product code	BC1-1403-7510
Barcode	8698523907559
IP rating	IP67
Voltage	220V-250V
Frequency	50Hz - 60Hz
Poles	2P+E
Housing material	polyamide 6
Conductor material	MS 58
Weight (g)	287
Box quantity	4
Carton quantity	72

Technical drawing

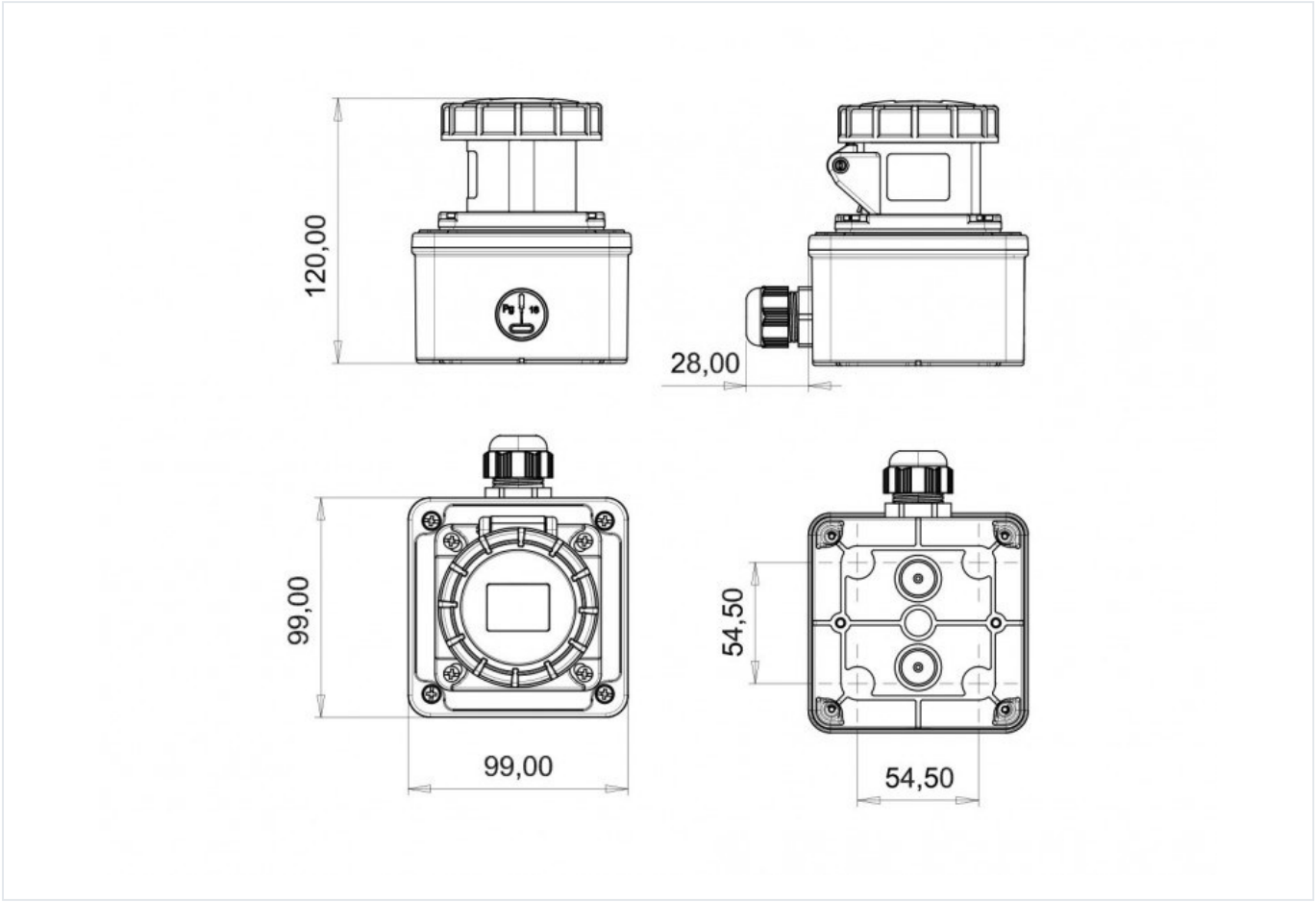

Technical values reflect the current product catalogue. Contact Bemis for installation documentation and confirmation of application suitability.