BC1-1403-2130

Rotating plug — 90°

Product code: BC1-1403-2130

IP rating	Voltage	Poles
IP44	**220V-250V**	**2P+E**



Specification	Value
Product code	BC1-1403-2130
Barcode	8698523940860
IP rating	IP44
Voltage	220V-250V
Frequency	50Hz - 60Hz
Poles	2P+E
Housing material	polyamide 6
Conductor material	MS 58
Weight (g)	151
Box quantity	6
Carton quantity	180

Technical drawing

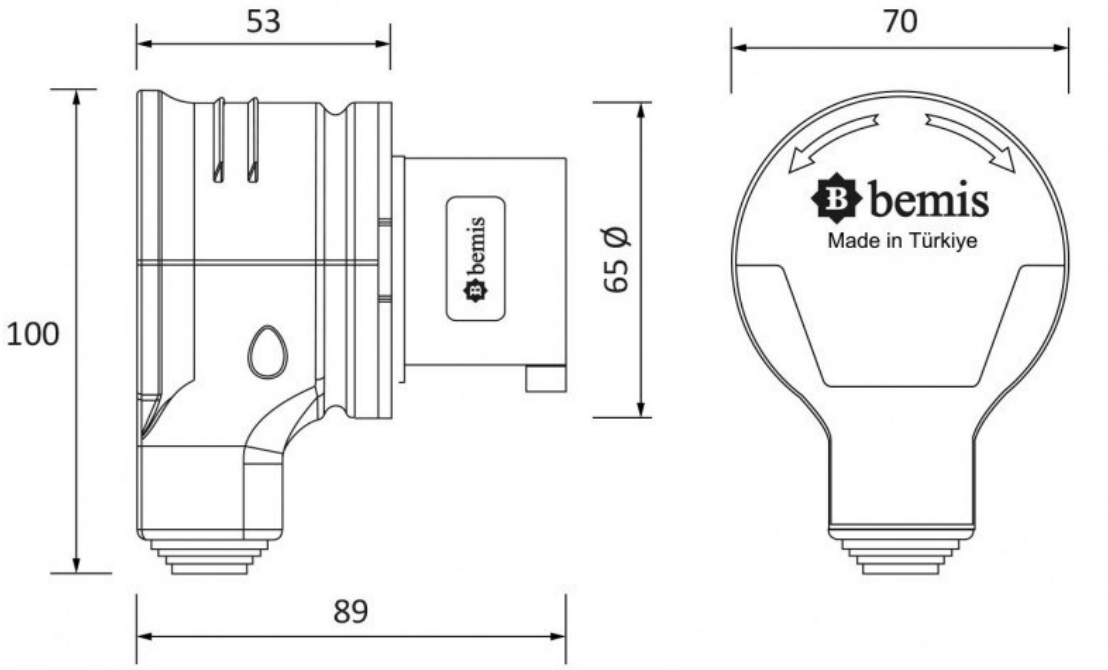

Technical values reflect the current product catalogue. Contact Bemis for installation documentation and confirmation of application suitability.