BC1-1403-2011

Industrial plug

Product code: BC1-1403-2011

IP rating **IP44**	Current (source notation) **16A**
Voltage **220V-250V**	Poles **2P+E**



Specification	Value
Product code	BC1-1403-2011
Barcode	8698523920251
IP rating	IP44
Voltage	220V-250V
Frequency	50Hz - 60Hz
Poles	2P+E
Housing material	polyamide 6
Conductor material	MS 58
Weight (g)	124
Box quantity	10
Carton quantity	180
Current (source notation)	16A
Clock position	6h

Technical drawing

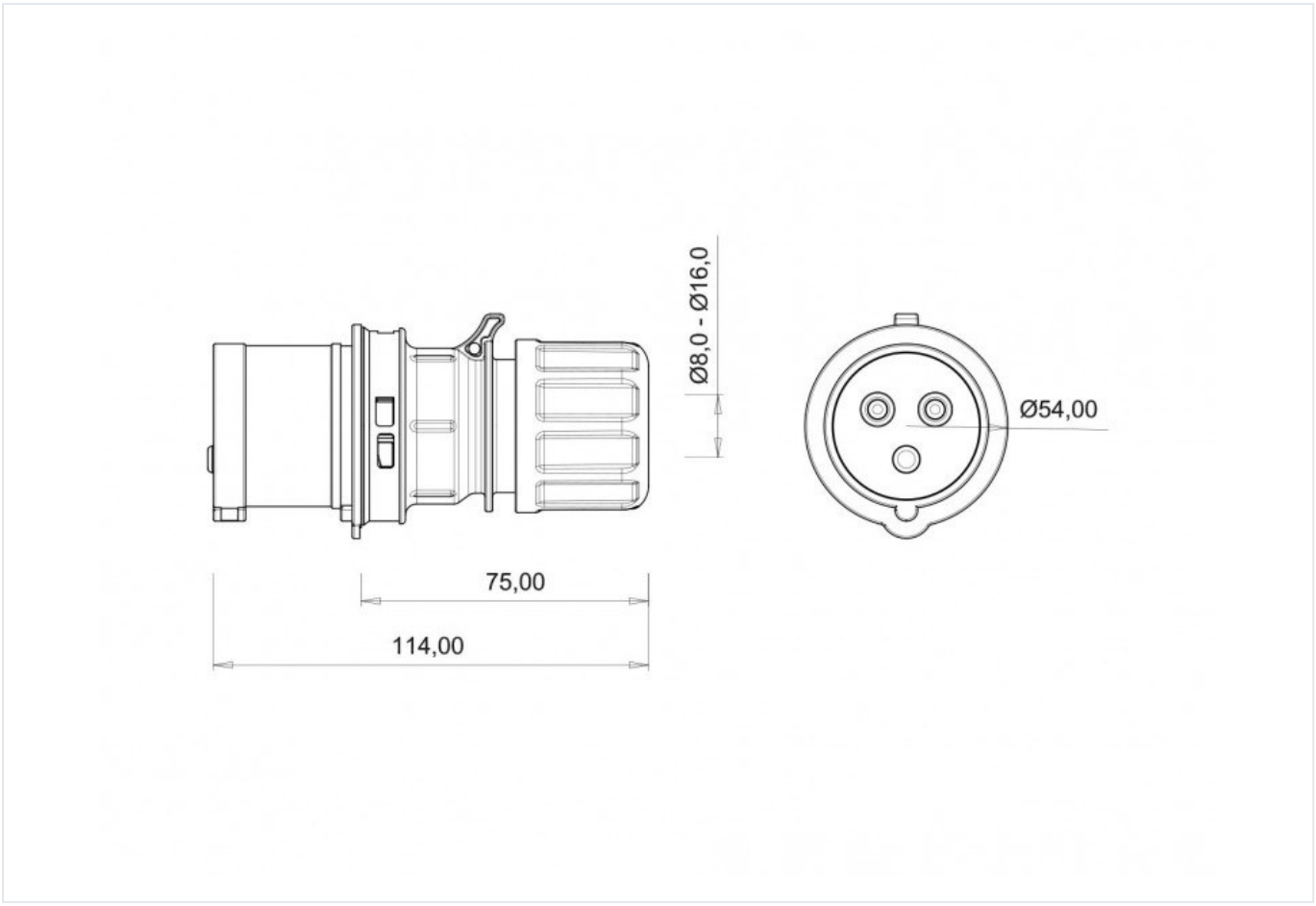

Technical values reflect the current product catalogue. Contact Bemis for installation documentation and confirmation of application suitability.