BC1-1303-7236

90° Wall inlet

Product code: BC1-1303-7236

IP rating	Voltage	Poles
IP67	**110V-150V**	**2P+E**



Specification	Value
Product code	BC1-1303-7236
Barcode	8698523911617
IP rating	IP67
Voltage	110V-150V
Frequency	50Hz - 60Hz
Poles	2P+E
Housing material	polyamide 6
Conductor material	MS 58
Weight (g)	230
Box quantity	3
Carton quantity	54

Technical drawing

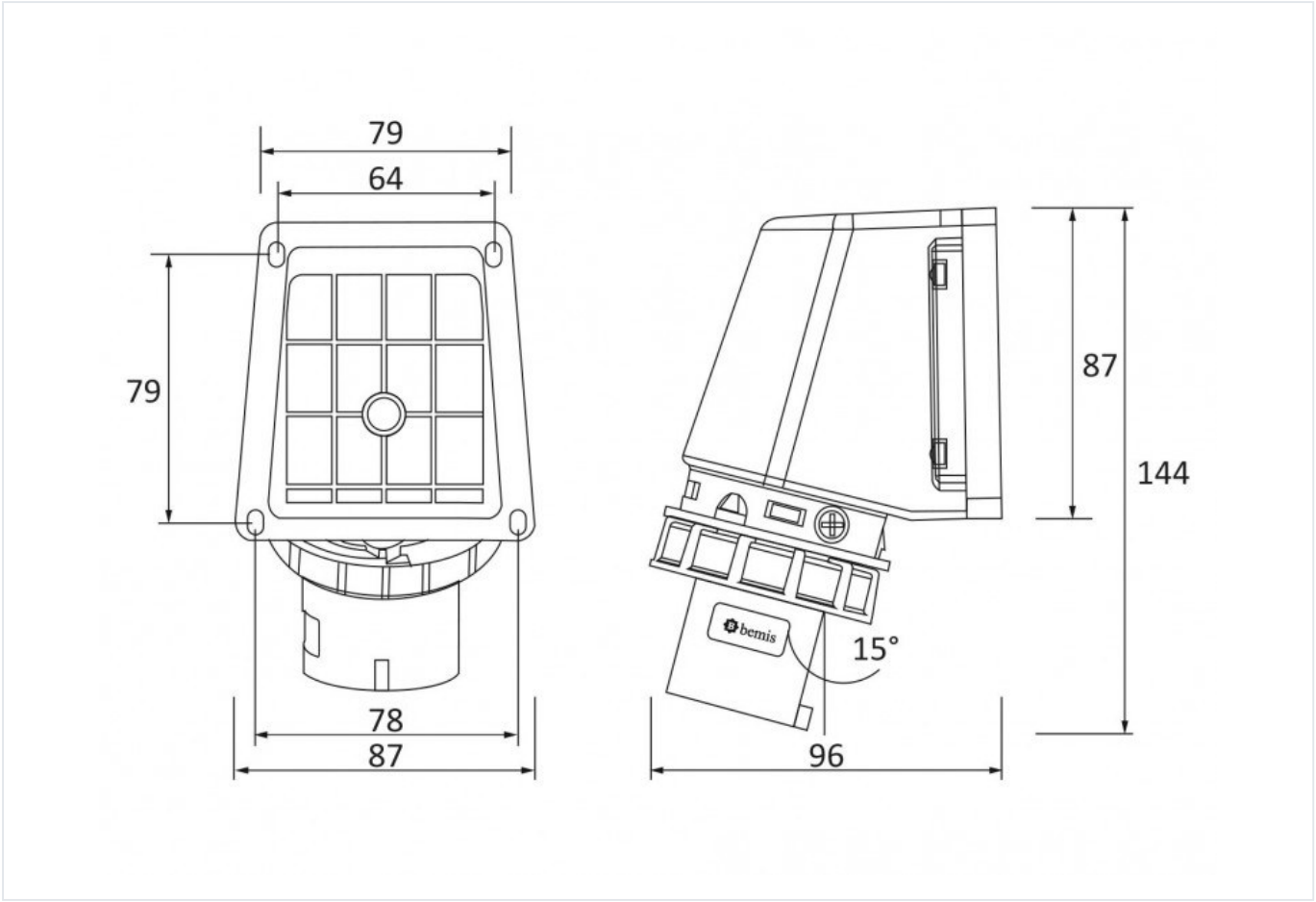

Technical values reflect the current product catalogue. Contact Bemis for installation documentation and confirmation of application suitability.