BC1-1303-7312

Cable connector

Product code: BC1-1303-7312

IP rating
IP67

Voltage
110V-150V

Poles
2P+E

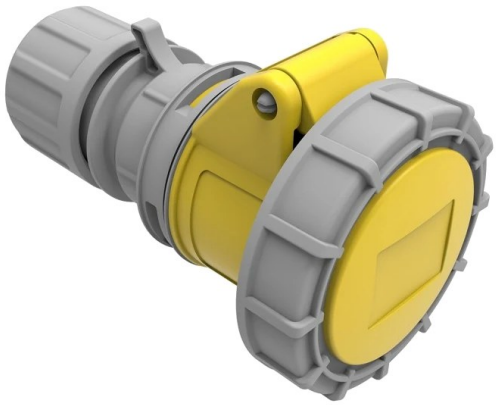

Specification	Value
Product code	BC1-1303-7312
Barcode	8698523903568
IP rating	IP67
Voltage	110V-150V
Frequency	50Hz - 60Hz
Poles	2P+E
Housing material	polyamide 6
Conductor material	MS 58
Weight (g)	172
Box quantity	8
Carton quantity	144

Technical drawing

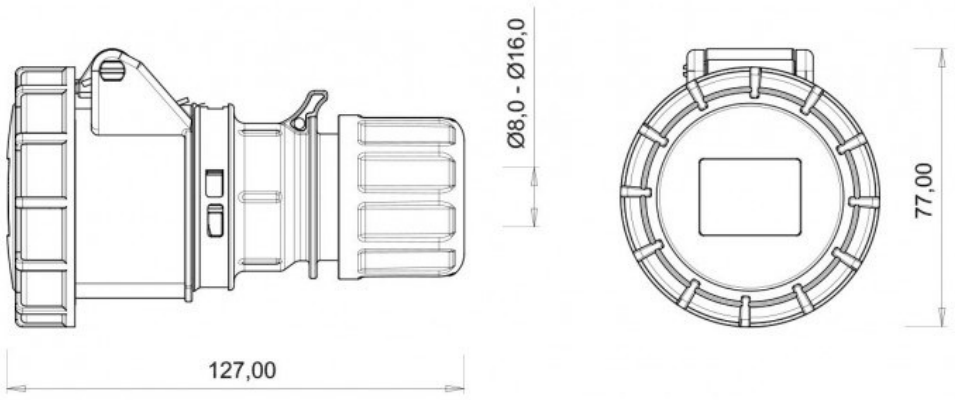

Technical values reflect the current product catalogue. Contact Bemis for installation documentation and confirmation of application suitability.