BC1-1303-7011

Industrial plug

Product code: BC1-1303-7011

IP rating	Voltage	Poles
IP67	**110V-150V**	**2P+E**

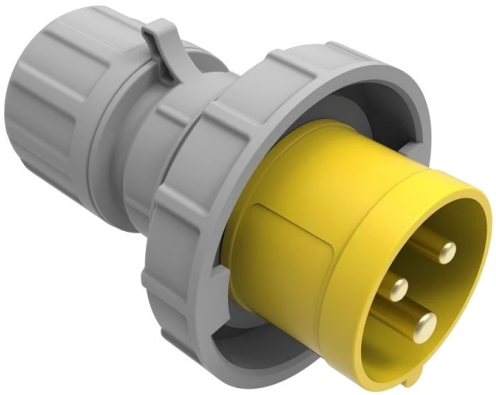

Specification	Value
Product code	BC1-1303-7011
Barcode	8698523903544
IP rating	IP67
Voltage	110V-150V
Frequency	50Hz - 60Hz
Poles	2P+E
Housing material	polyamide 6
Conductor material	MS 58
Weight (g)	214
Box quantity	8
Carton quantity	144

Technical drawing

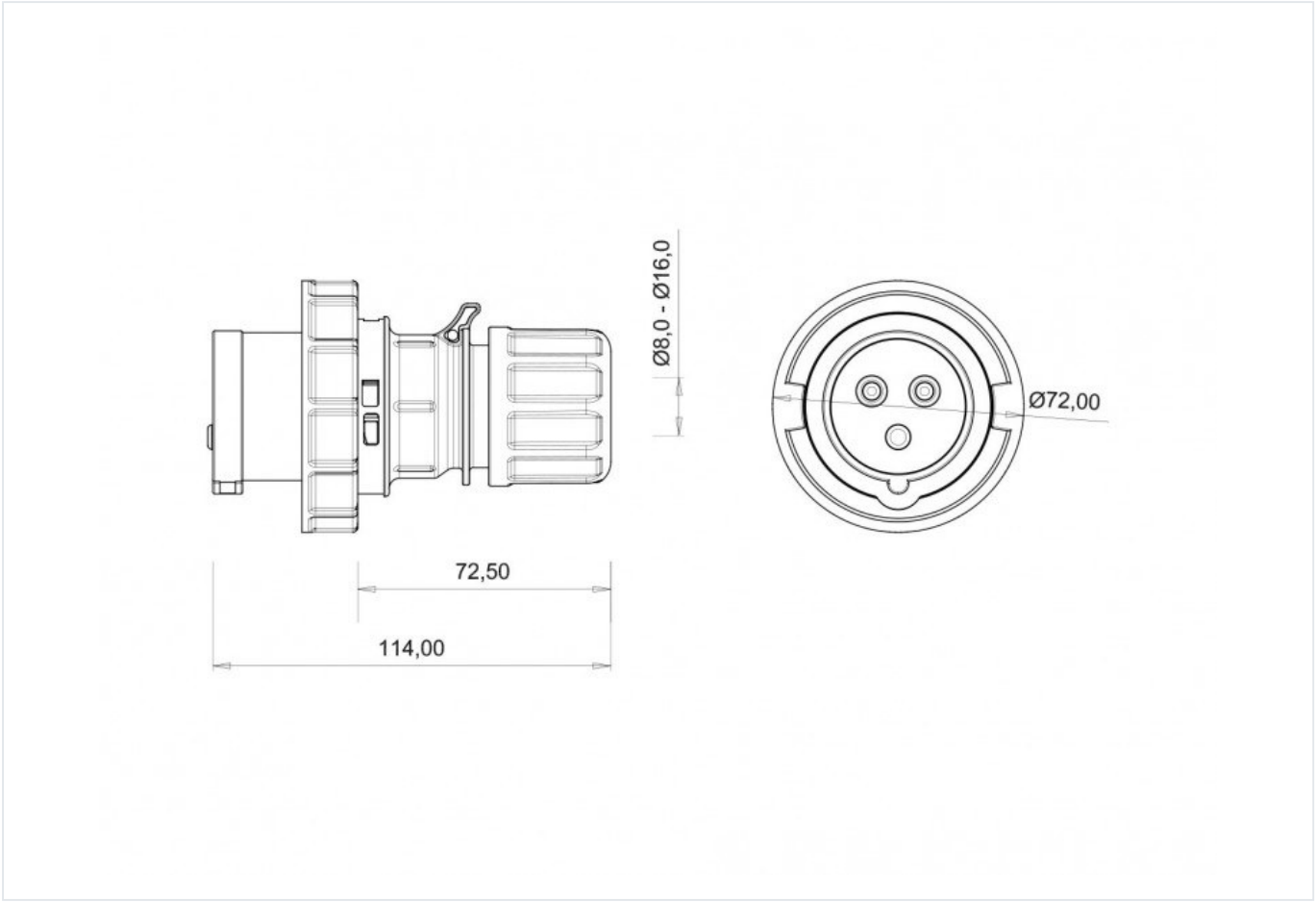

Technical values reflect the current product catalogue. Contact Bemis for installation documentation and confirmation of application suitability.