BC1-1303-2312

# Cable connector

Product code: BC1-1303-2312

IP rating
**IP44**

Voltage
**110V-150V**

Poles
**2P+E**

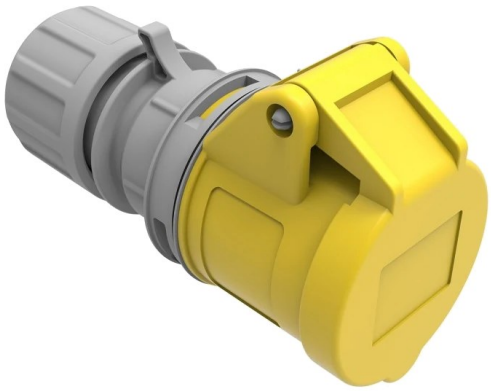

| Specification | Value |
|---|---|
| Product code | BC1-1303-2312 |
| Barcode | 8698523930274 |
| IP rating | IP44 |
| Voltage | 110V-150V |
| Frequency | 50Hz - 60Hz |
| Poles | 2P+E |
| Housing material | polyamide 6 |
| Conductor material | MS 58 |
| Weight (g) | 160 |
| Box quantity | 10 |
| Carton quantity | 180 |

## Technical drawing

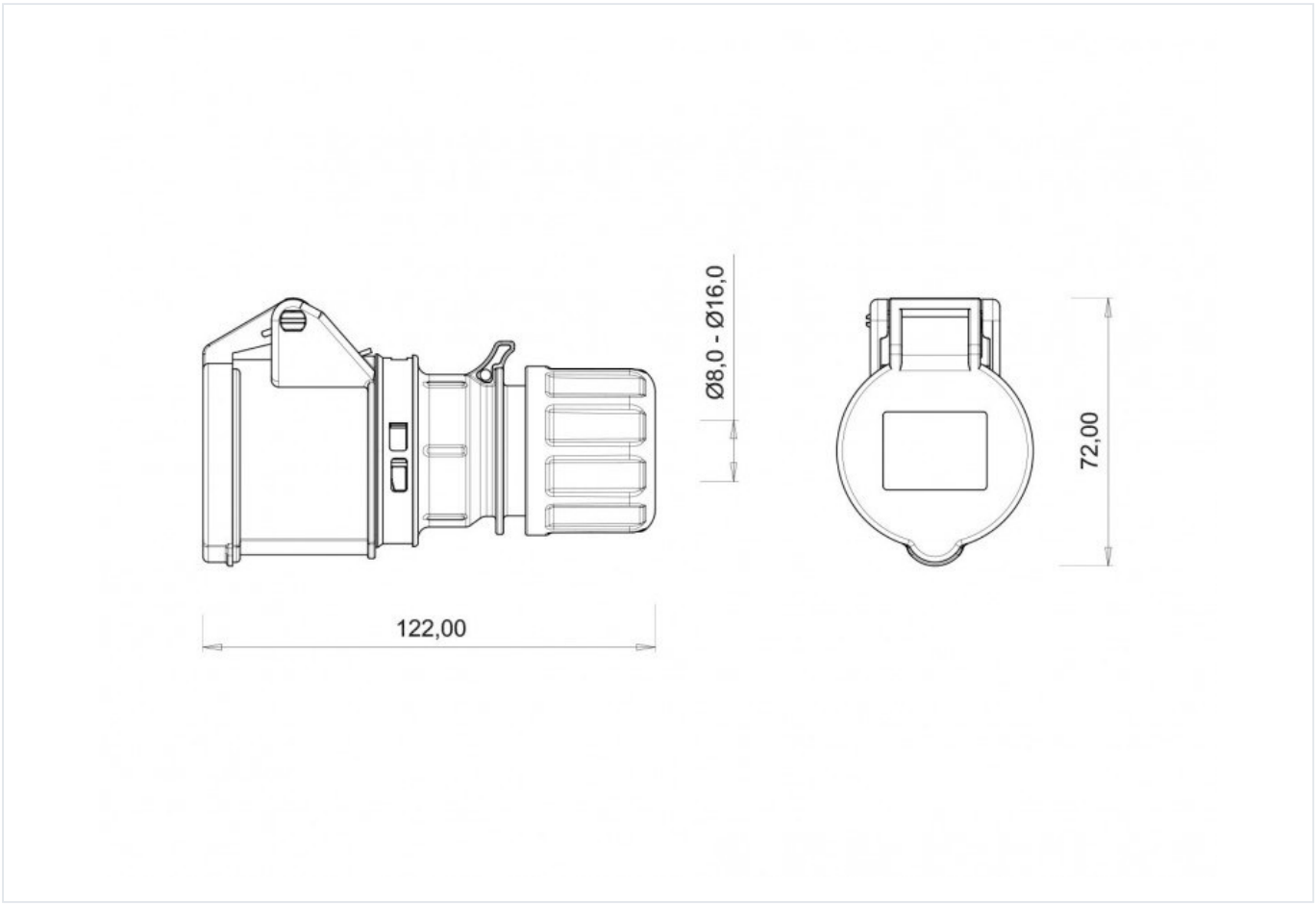


Technical values reflect the current product catalogue. Contact Bemis for installation documentation and confirmation of application suitability.