BC1-4505-7011

Industrial plug

Product code: BC1-4505-7011

IP rating **IP67**	Current (source notation) **63A**
Voltage **380V-450V**	Poles **3P+E+N**



Specification	Value
Product code	BC1-4505-7011
Barcode	8698523906422
IP rating	IP67
Current (source notation)	63A
Voltage	380V-450V
Frequency	50Hz - 60Hz
Poles	3P+E+N
Housing material	polyamide 6
Conductor material	MS 58
Weight (g)	699,1
Box quantity	1
Carton quantity	12

Technical drawing

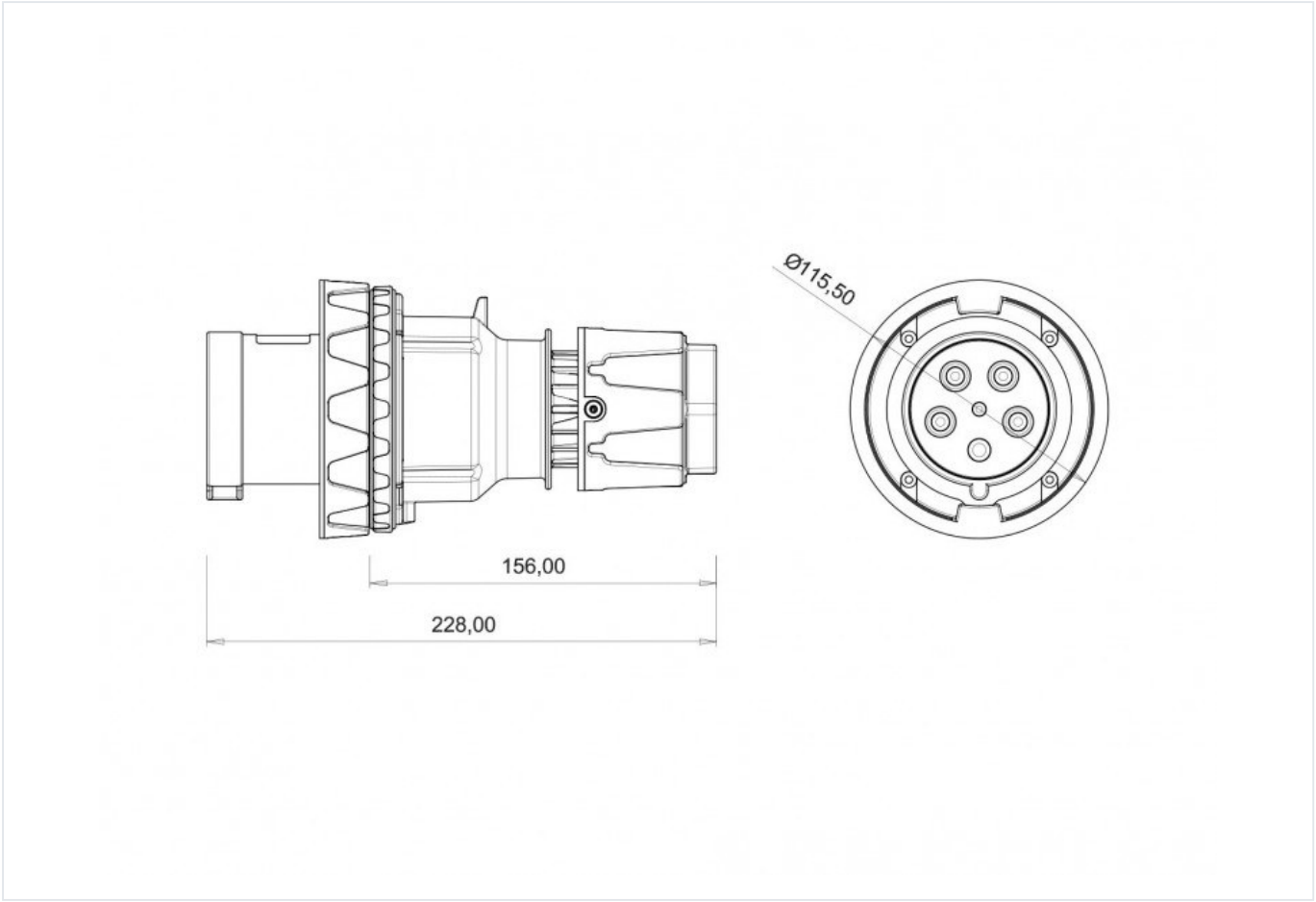

Technical values reflect the current product catalogue. Contact Bemis for installation documentation and confirmation of application suitability.