BC1-6505-7420

45° Panel socket

Product code: BC1-6505-7420

IP rating **IP67**	Current (source notation) **125A**
Voltage **380V-450V**	Poles **3P+E+N**



Specification	Value
Product code	BC1-6505-7420
Barcode	-
IP rating	IP67
Current (source notation)	125A
Voltage	380V-450V
Frequency	50Hz - 60Hz
Poles	3P+E+N
Housing material	polyamide 6
Conductor material	MS 58
Weight (g)	1062,9
Box quantity	1
Carton quantity	12

Technical drawing

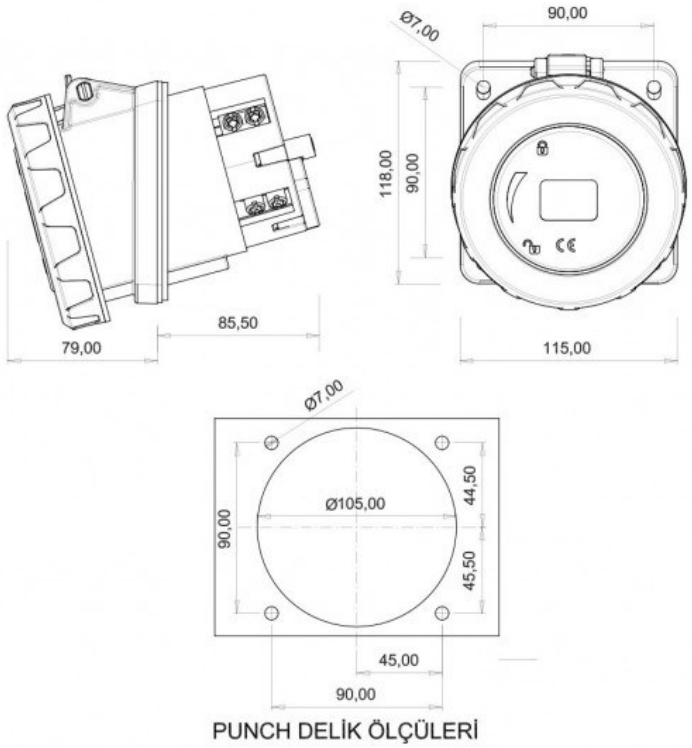

Technical values reflect the current product catalogue. Contact Bemis for installation documentation and confirmation of application suitability.