BC1-6505-7240

Wall inlet — 90° — with cam switch

Product code: BC1-6505-7240

IP rating	Current (source notation)
IP65	**125A**



Specification	Value
Product code	BC1-6505-7240
Barcode	-
IP rating	IP65
Current (source notation)	125A
Voltage	380V-450V
Frequency	50Hz - 60Hz
Poles	3P+E+N
Housing material	polyamide 6
Conductor material	MS 58
Weight (g)	-
Box quantity	1
Carton quantity	12

Technical drawing

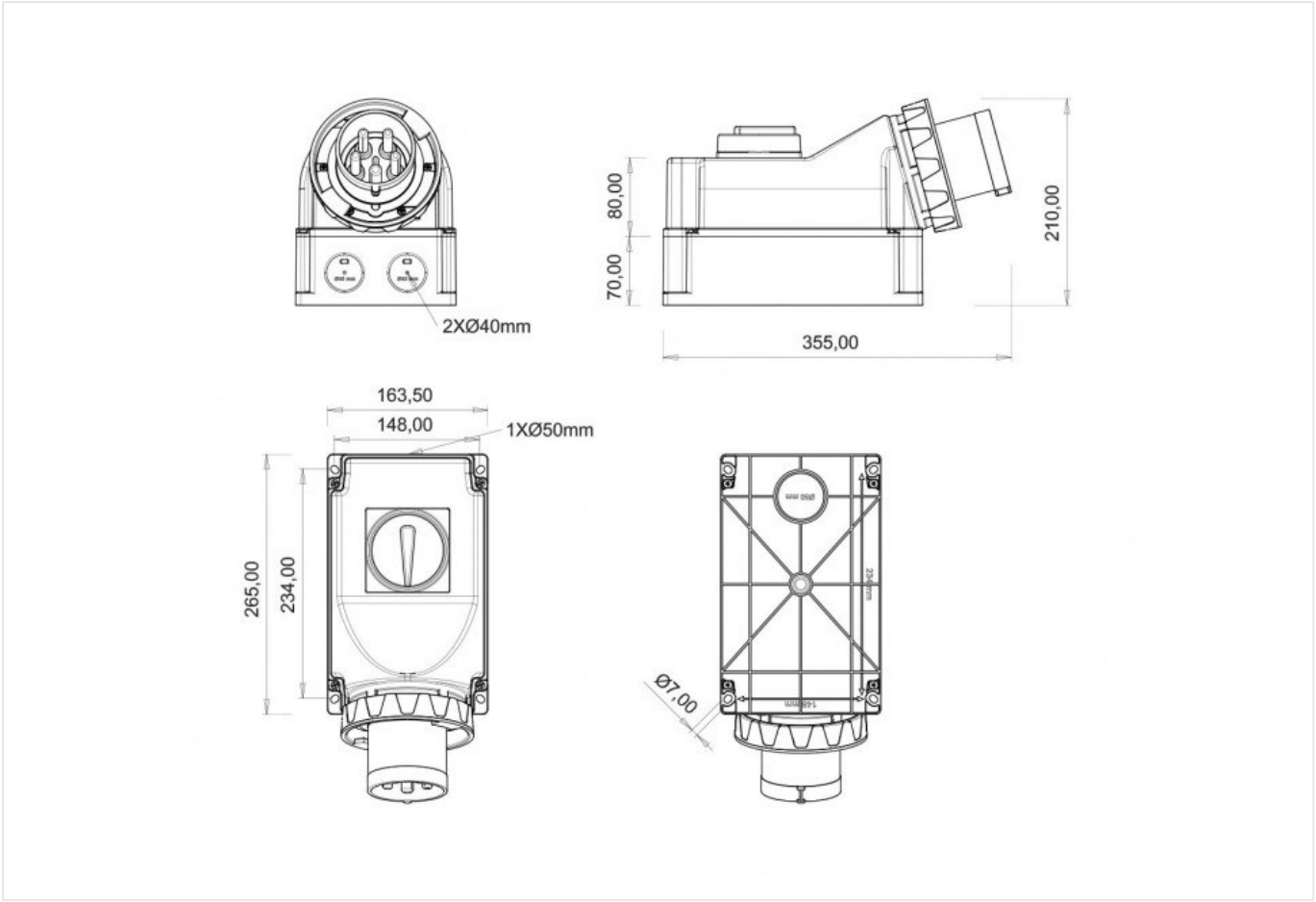

Technical values reflect the current product catalogue. Contact Bemis for installation documentation and confirmation of application suitability.