EXBB3-2231-0097

Ex-proof Aluminium junction box (80x130x73)

Product code: EXBB3-2231-0097

IP rating	Material
IP67	**aluminium**



Specification	Value
Product code	EXBB3-2231-0097
Barcode	-
IP rating	IP67
Material	aluminium
Colour	smoked
Lid type	Aluminium lid
Weight (g)	-
Box quantity	1
Carton quantity	35

Technical drawing

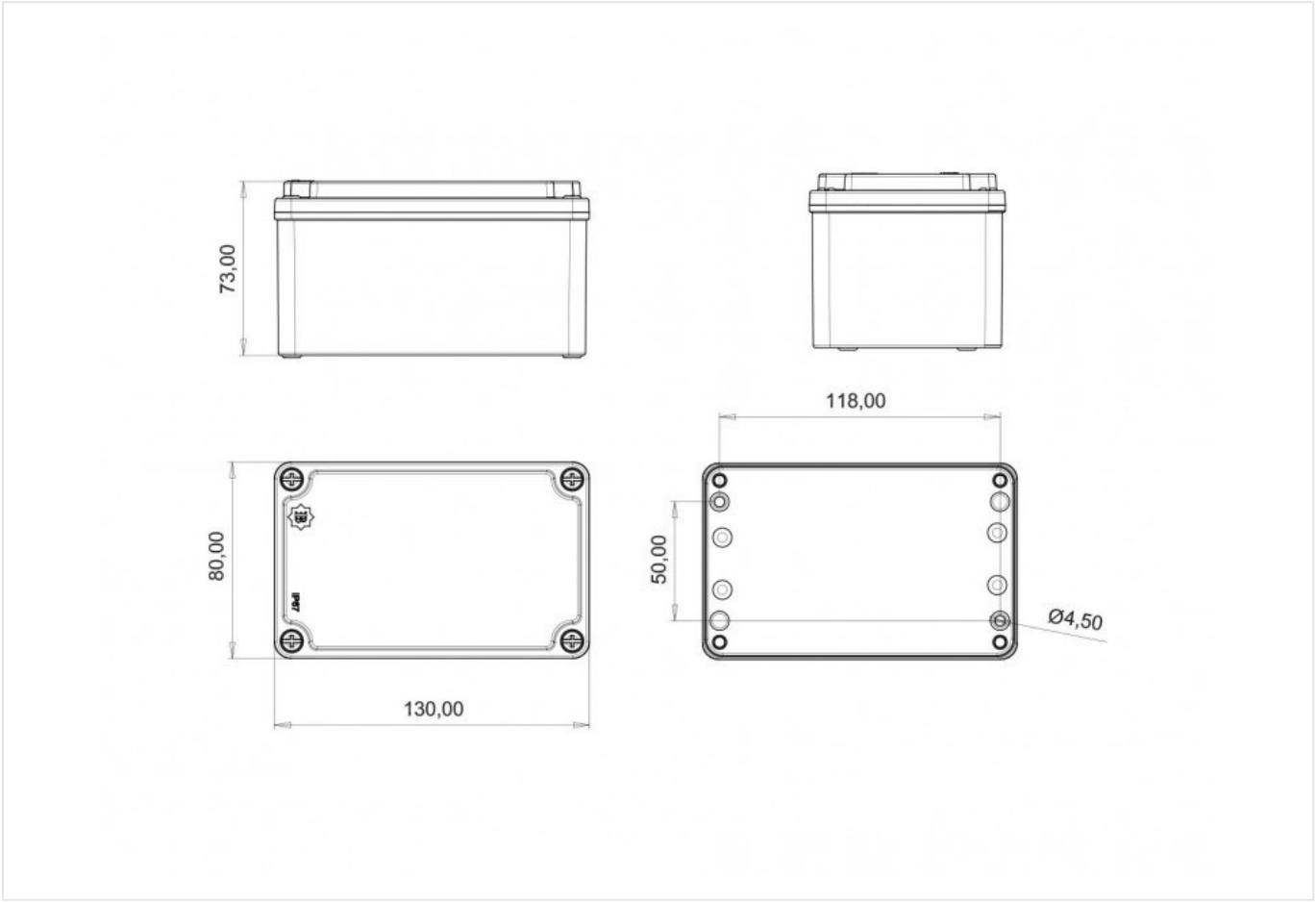

Technical values reflect the current product catalogue. Contact Bemis for installation documentation and confirmation of application suitability.