EXBB3-2143-1047

Ex-proof Aluminium junction box (160x160x90)

Product code: EXBB3-2143-1047

IP rating	Material
IP67	**aluminium**



Specification	Value
Product code	EXBB3-2143-1047
Barcode	-
IP rating	IP67
Material	aluminium
Colour	smoked
Lid type	Aluminium lid
Weight (g)	-
Box quantity	1
Carton quantity	30

Technical drawing

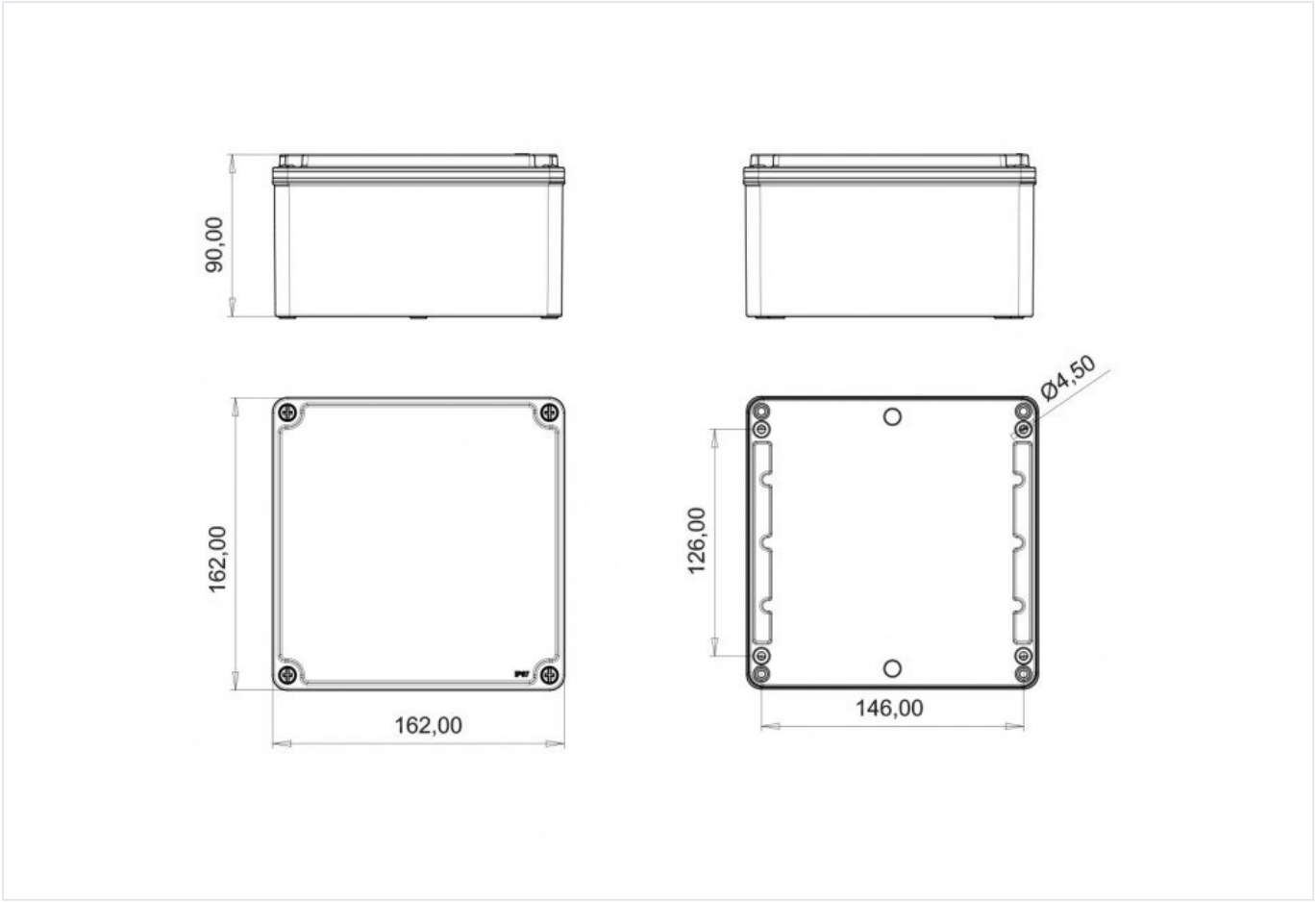

Technical values reflect the current product catalogue. Contact Bemis for installation documentation and confirmation of application suitability.