BB3-2113-1017

Aluminium junction box (65x100x40)

Product code: BB3-2113-1017

IP rating	Material
IP67	**aluminium**



Specification	Value
Product code	BB3-2113-1017
Barcode	-
IP rating	IP67
Material	aluminium
Colour	grey
Lid type	Aluminium lid
Weight (g)	-
Box quantity	1
Carton quantity	10

Technical drawing

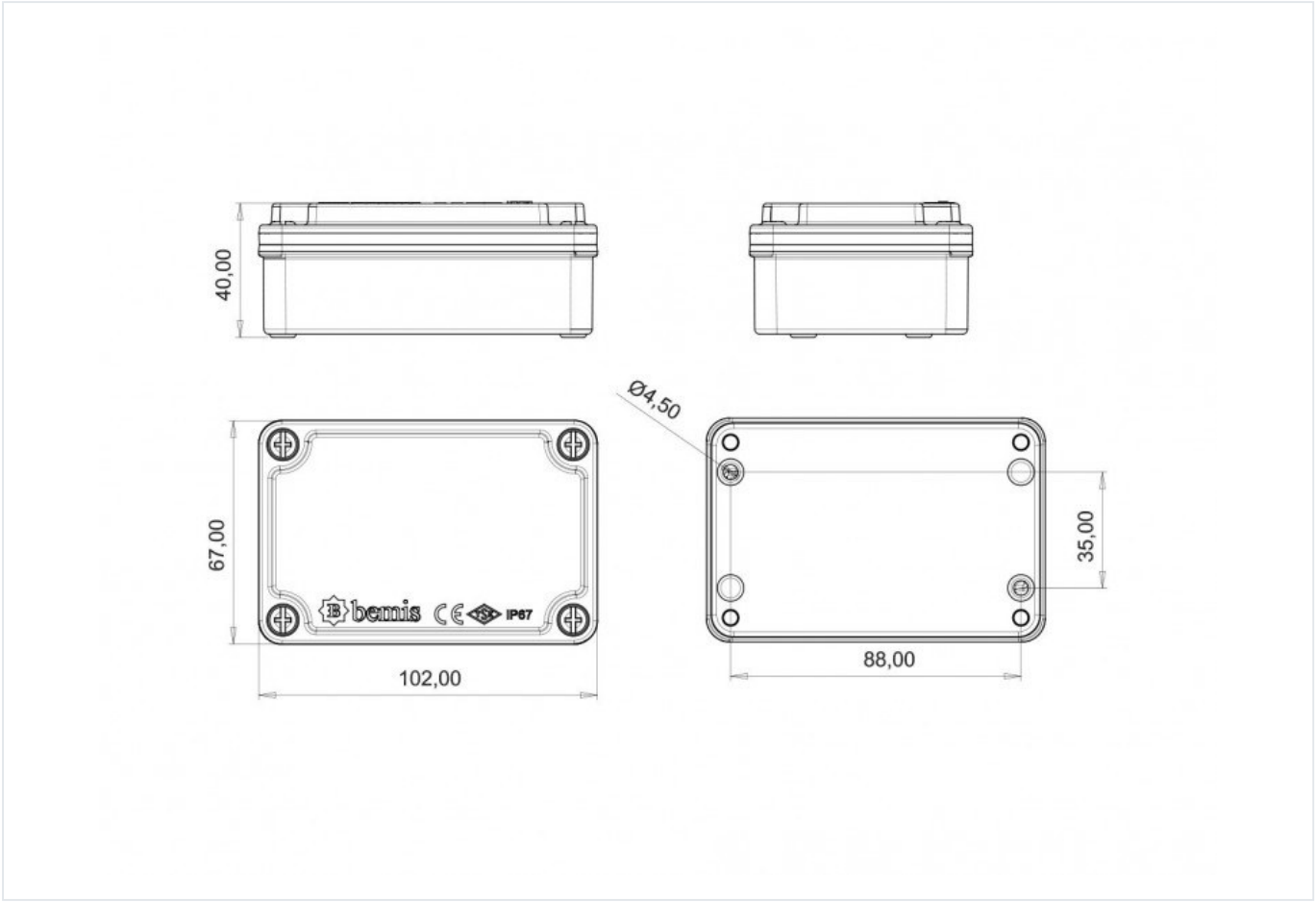

Technical values reflect the current product catalogue. Contact Bemis for installation documentation and confirmation of application suitability.