BB1-1331-0023

Plastic junction box 110x150x70

Product code: BB1-1331-0023

IP rating	Material
IP44	**ABS Halogen Free**



Specification	Value
Product code	BB1-1331-0023
Barcode	8698523929339
IP rating	IP44
Material	ABS Halogen Free
Lid type	Opaque screw-on lid
Weight (g)	217
Box quantity	4
Carton quantity	48

Technical drawing

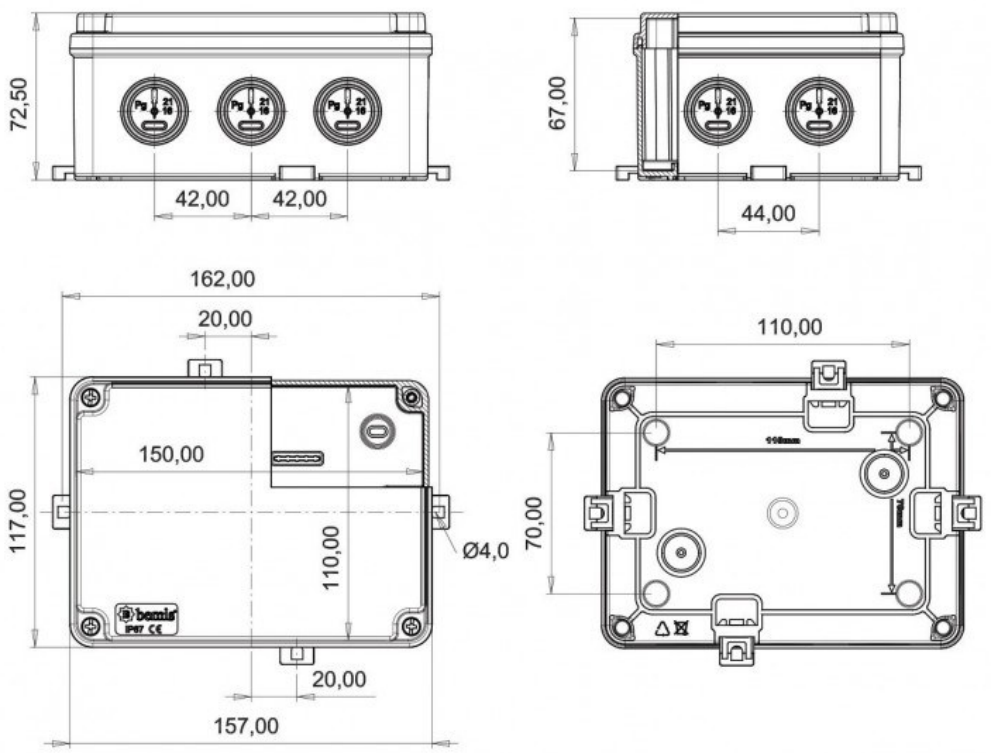

Technical values reflect the current product catalogue. Contact Bemis for installation documentation and confirmation of application suitability.