BB1-1231-0026

Plastic junction box 110x110x70

Product code: BB1-1231-0026

IP rating
IP67

Material
ABS Halogen Free



Specification	Value
Product code	BB1-1231-0026
Barcode	8698523928158
IP rating	IP67
Material	ABS Halogen Free
Lid type	Opaque screw-on lid
Weight (g)	204,4
Box quantity	6
Carton quantity	72

Technical drawing

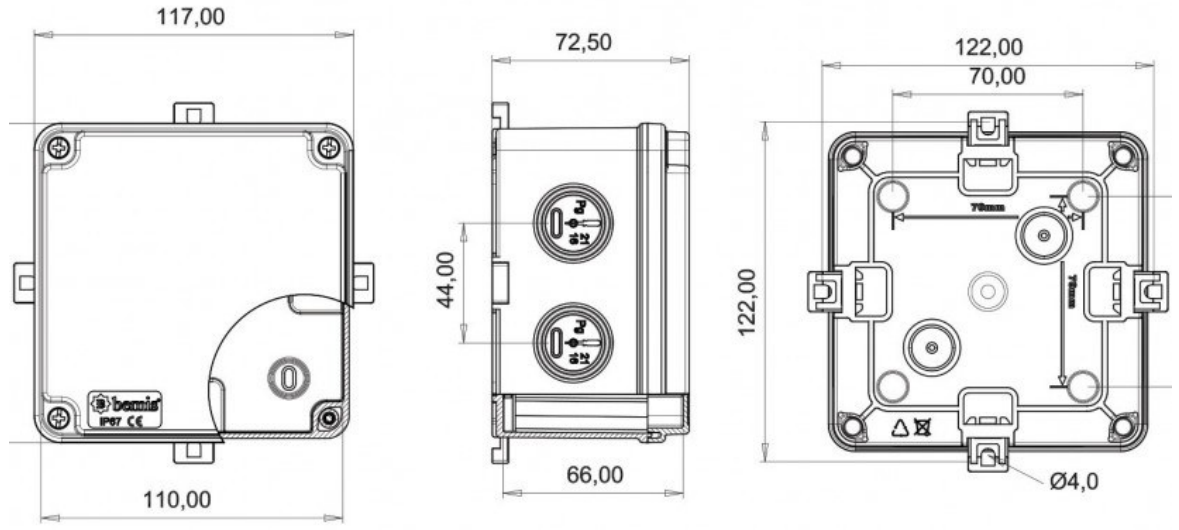

Technical values reflect the current product catalogue. Contact Bemis for installation documentation and confirmation of application suitability.