BB1-1231-0023

Plastic junction box 110x110x70

Product code: BB1-1231-0023

IP rating	Material
IP44	**ABS Halogen Free**



Specification	Value
Product code	BB1-1231-0023
Barcode	8698523928110
IP rating	IP44
Material	ABS Halogen Free
Lid type	Opaque screw-on lid
Weight (g)	183
Box quantity	6
Carton quantity	72

Technical drawing

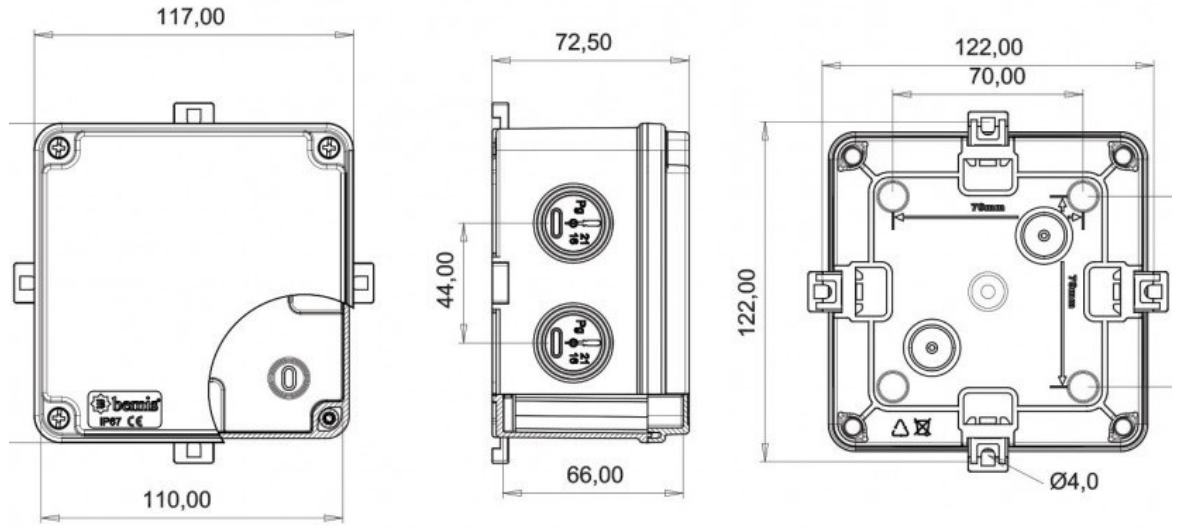

Technical values reflect the current product catalogue. Contact Bemis for installation documentation and confirmation of application suitability.