BS1-1402-7417

# Panel socket (with safety shutters) — quick connection

Product code: BS1-1402-7417

| IP rating | Current (source notation) |
|---|---|
| **IP68** | **1/16A** |




| Specification | Value |
|---|---|
| Product code | BS1-1402-7417 |
| Barcode | - |
| IP rating | IP68 |
| Current (source notation) | 1/16A |
| Voltage | 220V-250V |
| Poles | 2P+E |
| Housing material | polyamide 6 |
| Conductor material | MS 58 |
| Weight (g) | - |
| Box quantity | 8 |
| Carton quantity | 144 |

## Technical drawing

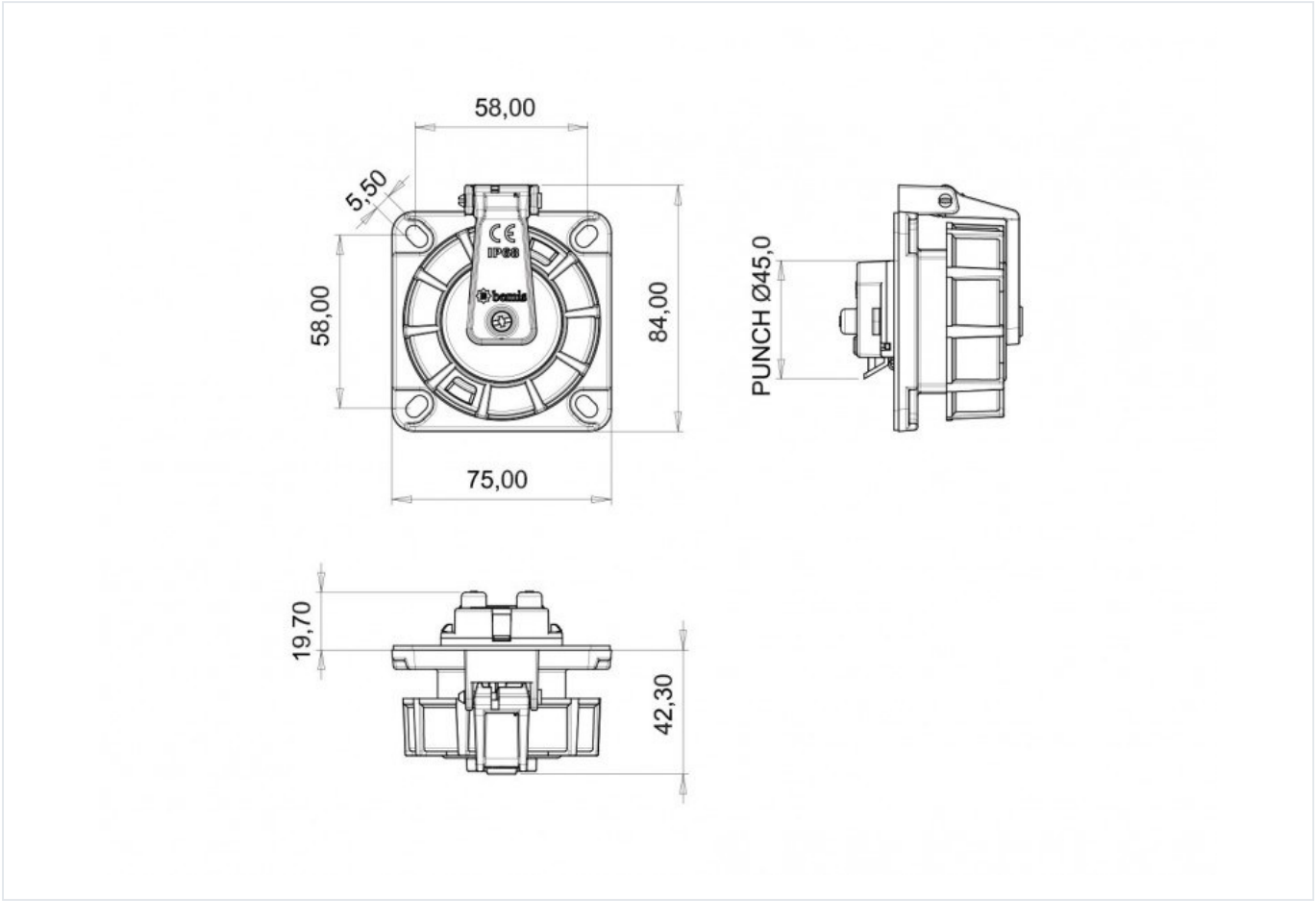


Technical values reflect the current product catalogue. Contact Bemis for installation documentation and confirmation of application suitability.