BY8-1402-2477

quick connection Panel socket with fixing nut (with safety shutters) — French type

Product code: BY8-1402-2477



IP rating	Current (source notation)
IP44	**1/16A**

Specification	Value
Product code	BY8-1402-2477
Barcode	-
IP rating	IP44
Current (source notation)	1/16A
Voltage	220V-250V
Poles	2P+E
Housing material	polyamide 6
Conductor material	MS 58
Weight (g)	-
Box quantity	30
Carton quantity	540

Technical drawing

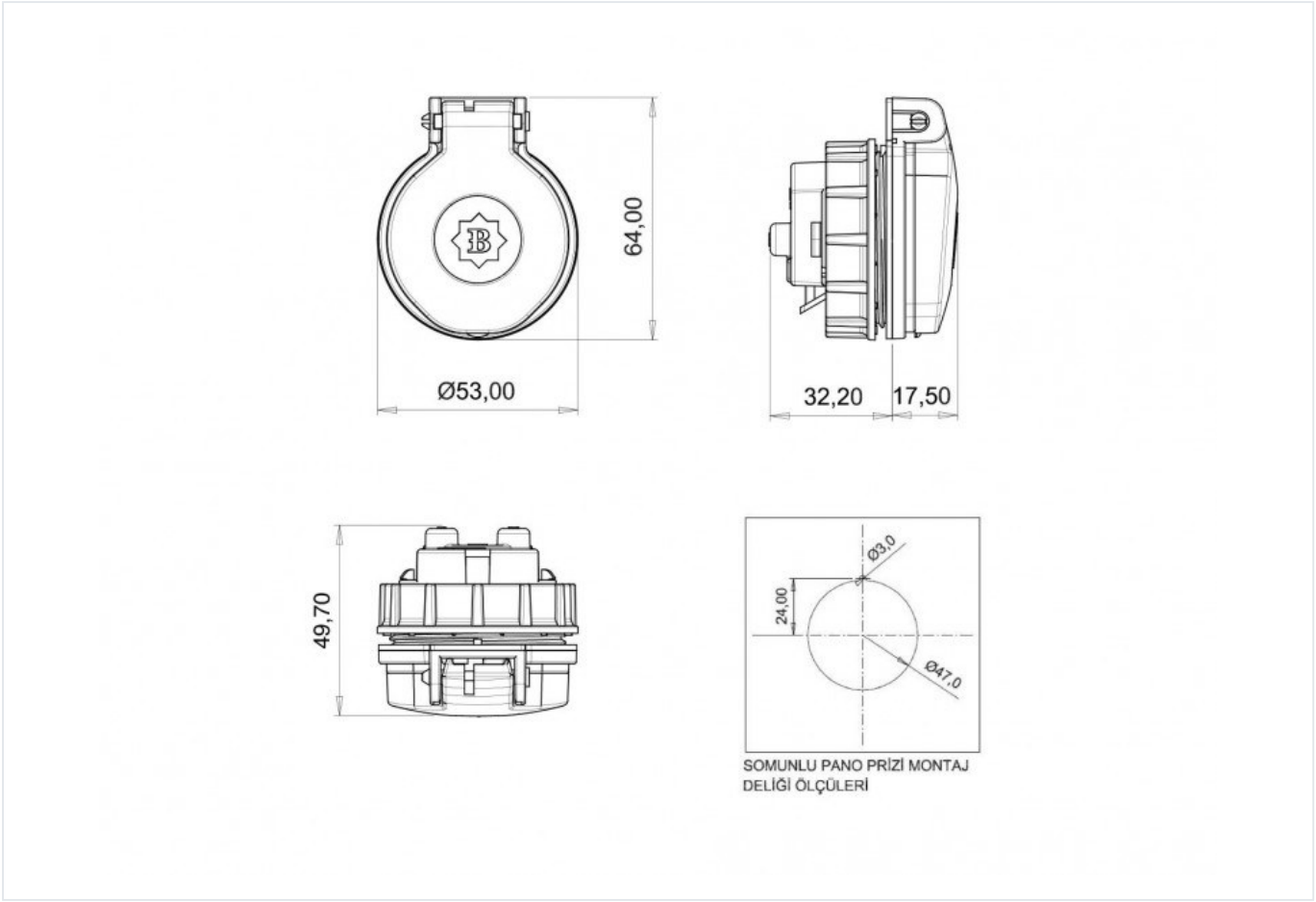

Technical values reflect the current product catalogue. Contact Bemis for installation documentation and confirmation of application suitability.