BK1-1402-3622

2-way socket strip French type

Product code: BK1-1402-3622

IP rating	Current (source notation)
IP54	**1/16A**



Specification	Value
Product code	BK1-1402-3622
Barcode	-
IP rating	IP54
Current (source notation)	1/16A
Voltage	220V-250V
Frequency	50Hz - 60Hz
Poles	2P+E
Housing material	rubber
Conductor material	MS 58
Socket option	with French-type socket
Weight (g)	232
Box quantity	8
Carton quantity	144

Technical drawing

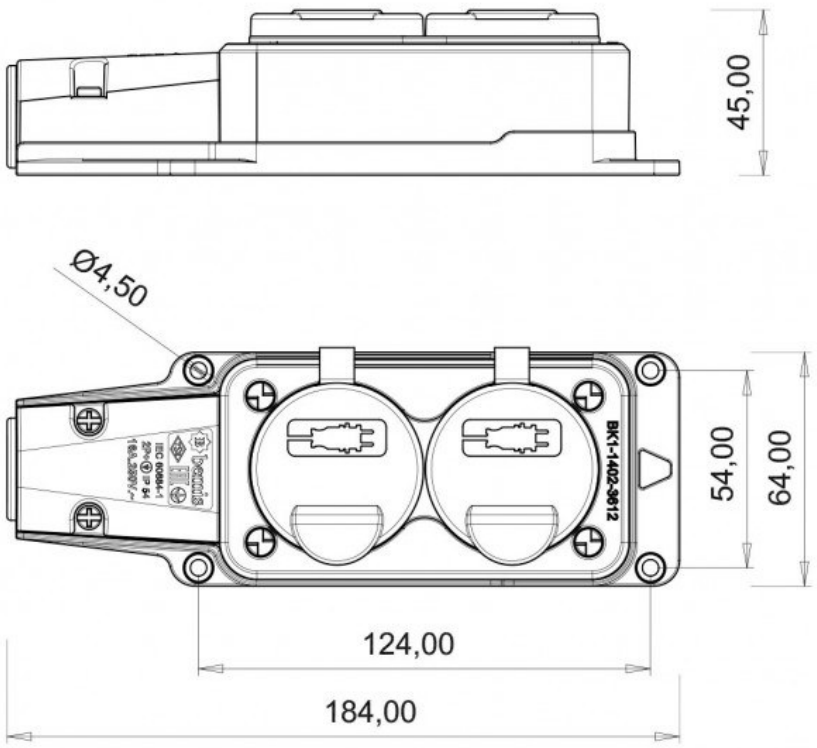

Technical values reflect the current product catalogue. Contact Bemis for installation documentation and confirmation of application suitability.