BY2-1402-2011

Straight plug (blue)

Product code: BY2-1402-2011

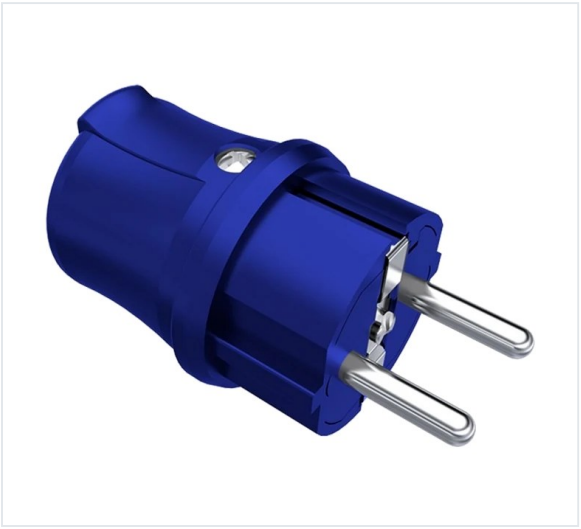

IP rating	Voltage	Poles
IP44	**220V-250V**	**2P+E**

Specification	Value
Product code	BY2-1402-2011
Barcode	-
IP rating	IP44
Voltage	220V-250V
Poles	2P+E
Housing material	polyamide 6
Conductor material	MS 58
Colour	blue
Weight (g)	-
Box quantity	35
Carton quantity	630

Technical drawing

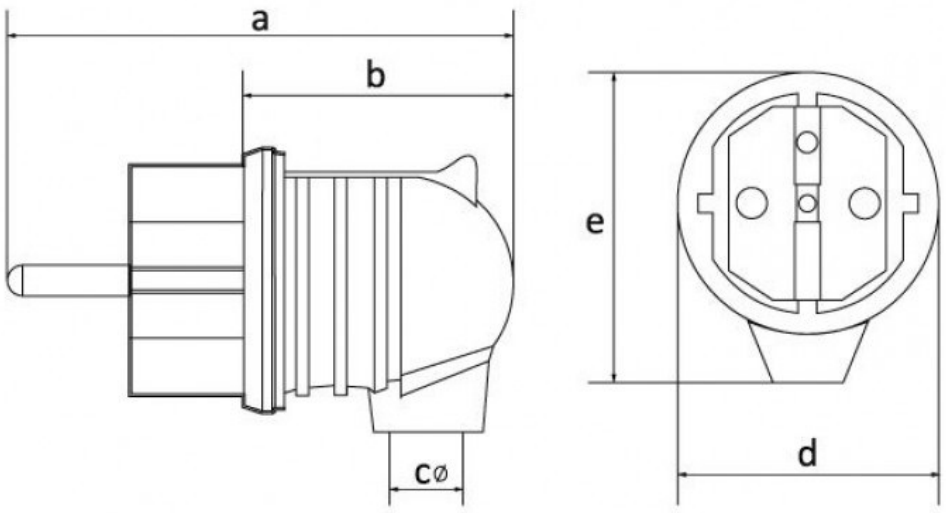

Ölçüler / Dimensions (mm)			
a	80	e	46
b	44	f	
cø	7	g	
d	42	h	

Technical values reflect the current product catalogue. Contact Bemis for installation documentation and confirmation of application suitability.