BY8-1402-2720

UPS Panel socket (yellow)

Product code: BY8-1402-2720

IP rating	Voltage	Poles
IP44	**220V-250V**	**2P+E**



Specification	Value
Product code	BY8-1402-2720
Barcode	-
IP rating	IP44
Voltage	220V-250V
Poles	2P+E
Housing material	polyamide 6
Conductor material	MS 58
Colour	yellow
Weight (g)	-
Box quantity	30
Carton quantity	540

Technical drawing

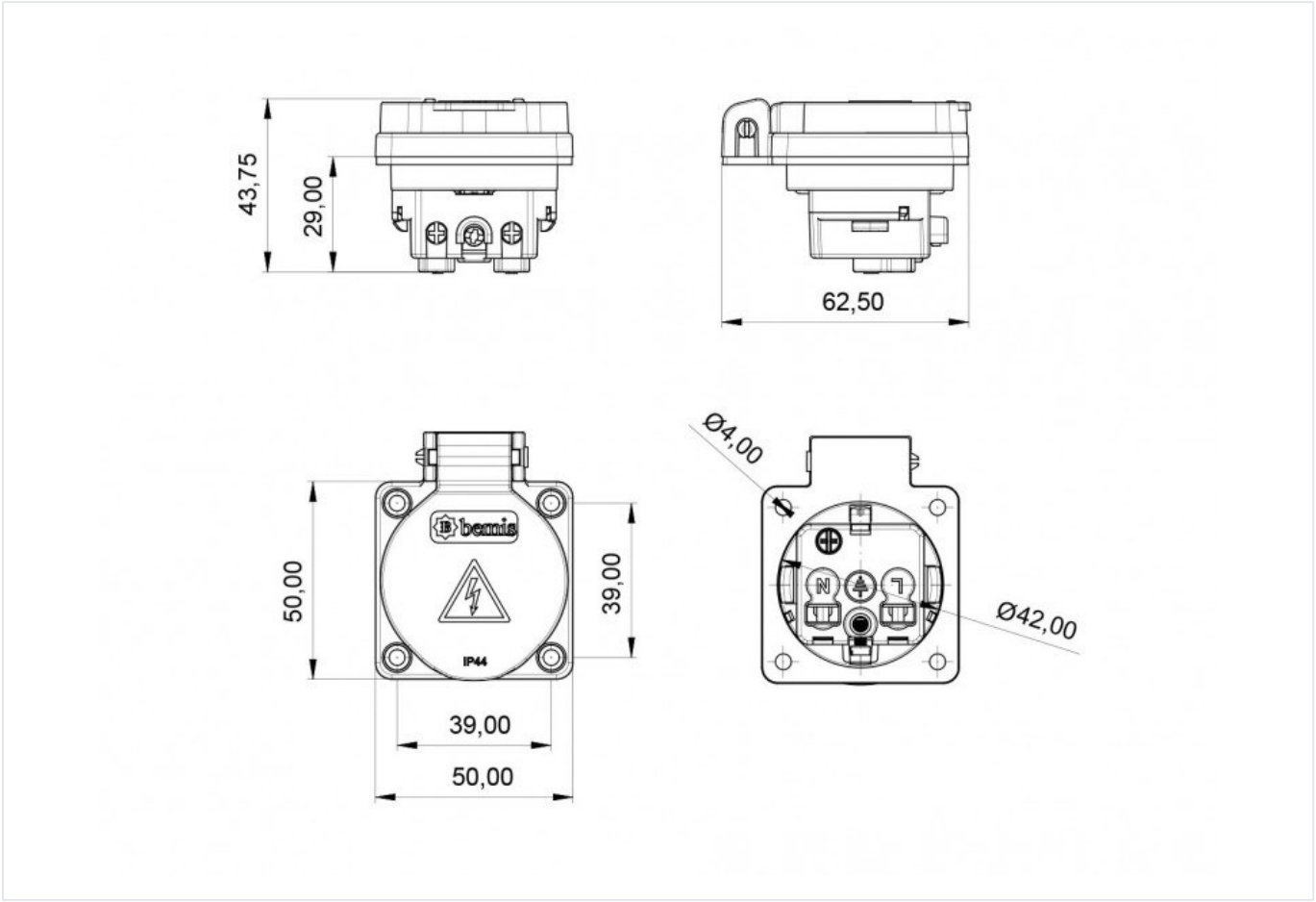

Technical values reflect the current product catalogue. Contact Bemis for installation documentation and confirmation of application suitability.