BV2-1402-2031

UPS Straight plug (blue)

Product code: BV2-1402-2031



IP rating	Voltage	Poles
IP44	**220V-250V**	**2P+E**

Specification	Value
Product code	BV2-1402-2031
Barcode	8698523921319
IP rating	IP44
Voltage	220V-250V
Poles	2P+E
Housing material	rubber
Conductor material	MS 58
Colour	blue
Weight (g)	47
Box quantity	30
Carton quantity	540

Technical drawing

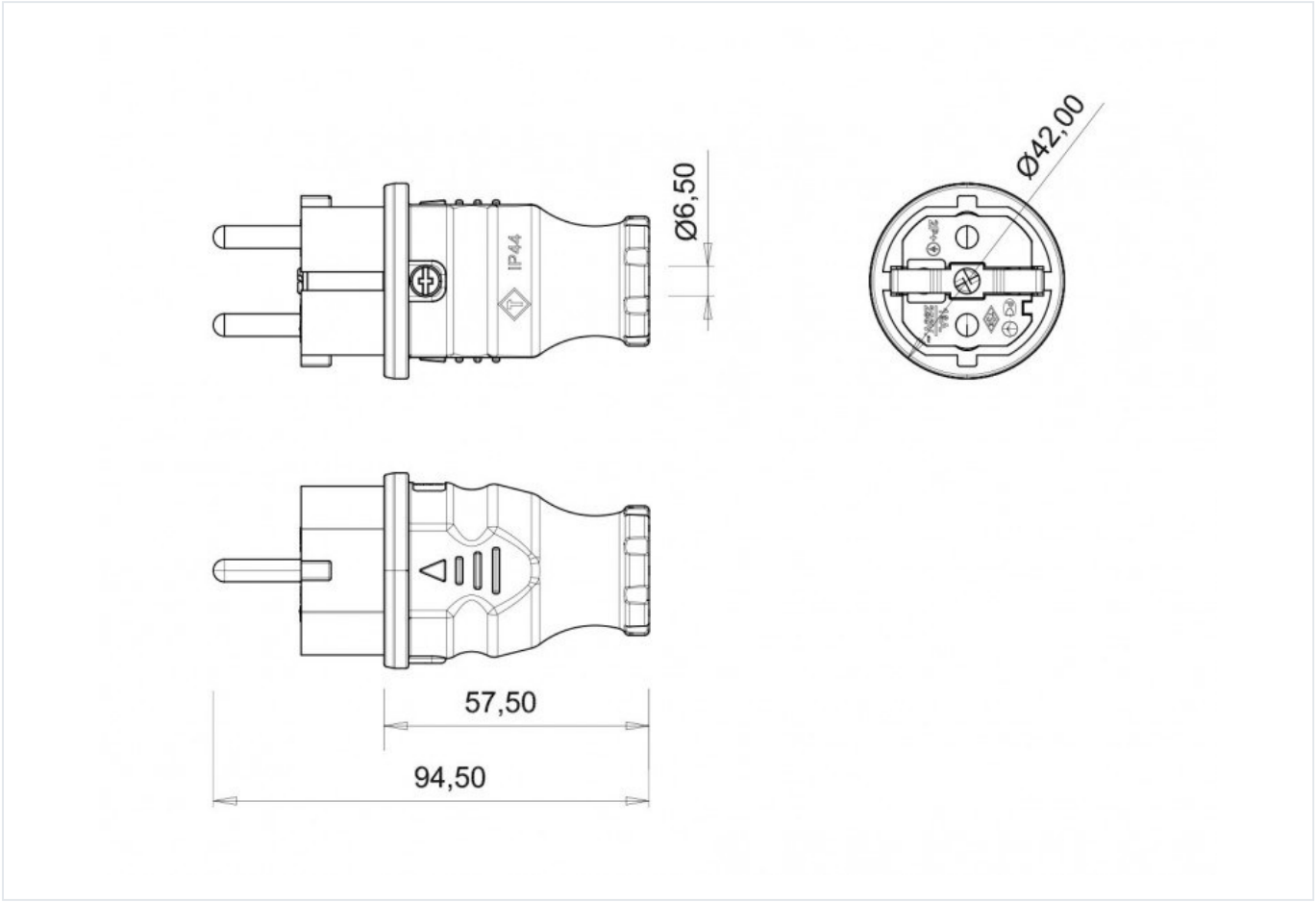

Technical values reflect the current product catalogue. Contact Bemis for installation documentation and confirmation of application suitability.