BK1-1402-2041

UPS Angled plug with handle

Product code: BK1-1402-2041

IP rating	Voltage
IP44	**220V-250V**



Specification	Value
Product code	BK1-1402-2041
Barcode	8698523900413
IP rating	IP44
Voltage	220V-250V
Poles	2P+E
Housing material	rubber
Conductor material	MS 58
Weight (g)	43
Box quantity	20
Carton quantity	360

Technical drawing

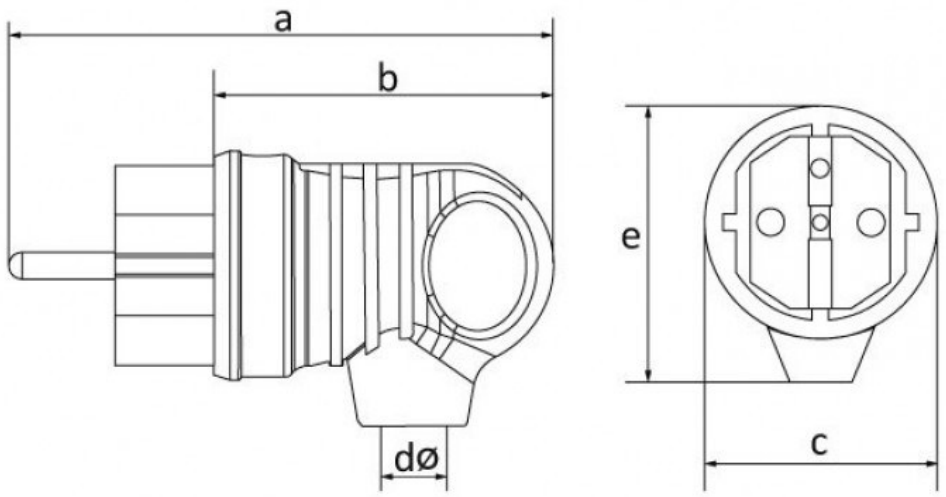

Ölçüler / Dimensions (mm)			
a	100	e	52
b	63	f	
c	42	g	
dø	7	h	

Technical values reflect the current product catalogue. Contact Bemis for installation documentation and confirmation of application suitability.