BV4-1402-2011

Straight plug (orange)

Product code: BV4-1402-2011

IP rating
IP44

Voltage
220V-250V

Poles
2P+E



Specification	Value
Product code	BV4-1402-2011
Barcode	8698523942116
IP rating	IP44
Voltage	220V-250V
Poles	2P+E
Housing material	rubber
Conductor material	MS 58
Colour	orange
Weight (g)	46
Box quantity	30
Carton quantity	540

Technical drawing

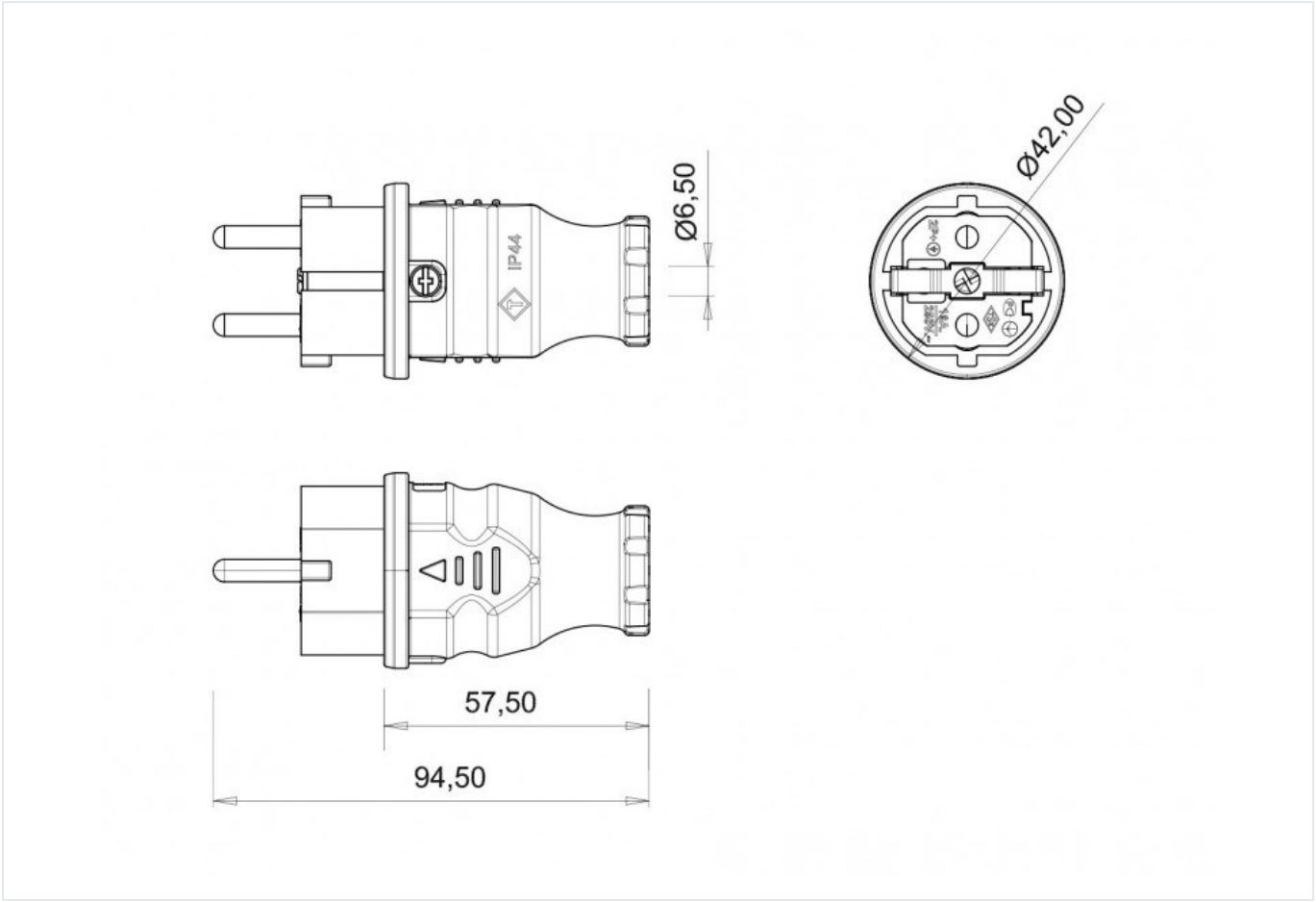

Technical values reflect the current product catalogue. Contact Bemis for installation documentation and confirmation of application suitability.