BM6-7231-2610

Cable reel with trolley

Product code: BM6-7231-2610

IP rating **IP67**	Socket option **with sockets**
Cable option **without cable**	Cable type **5x2,5mm**



Specification	Value
Product code	BM6-7231-2610
Barcode	8698523912997
IP rating	IP67
Housing material	1mm cold-rolled steel sheet
Socket option	with sockets
Cable option	without cable
Cable capacity	100m. cable capacity
Cable type	5x2,5mm
Weight (g)	7831
Box quantity	1
Carton quantity	1

Technical drawing

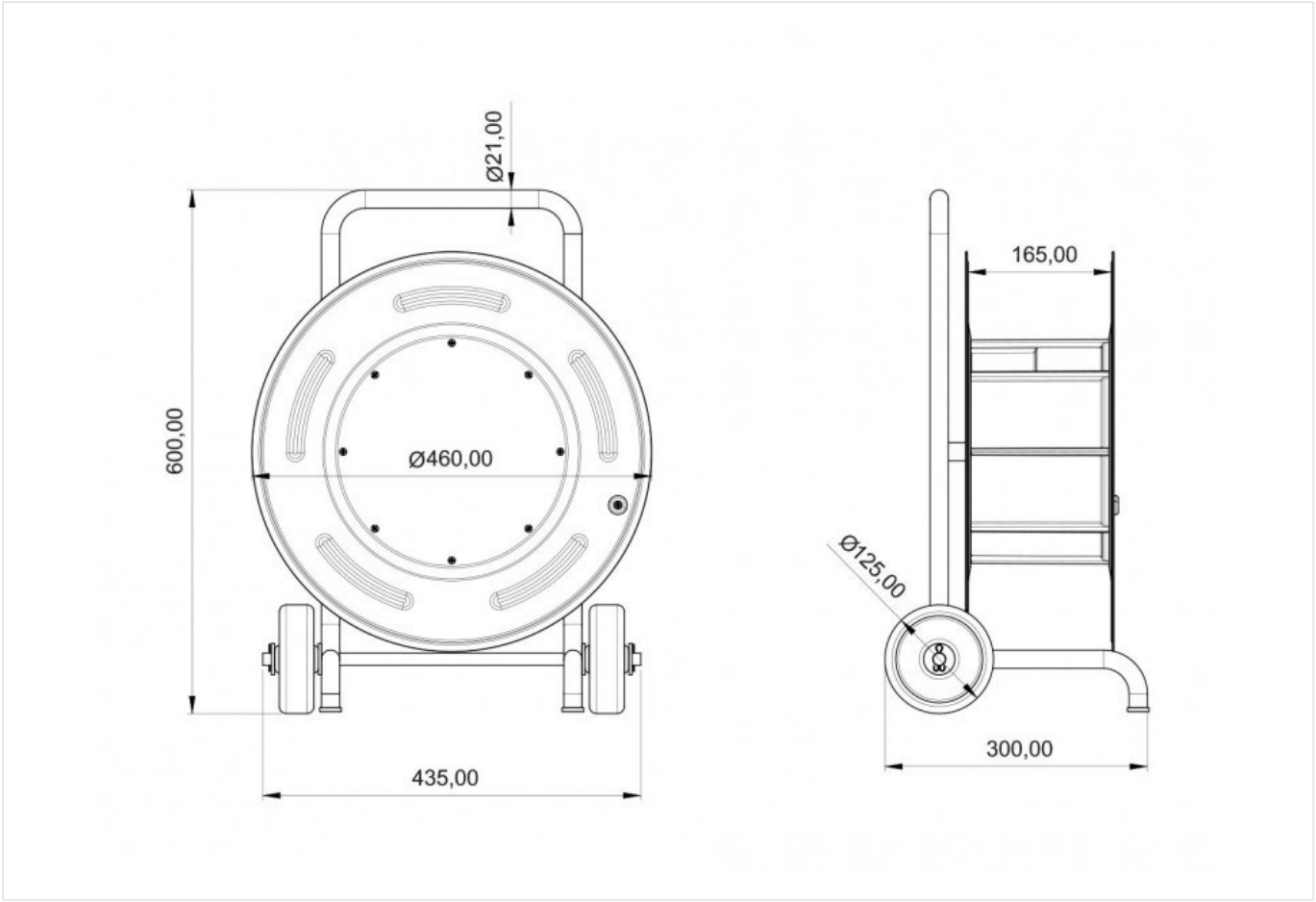

Technical values reflect the current product catalogue. Contact Bemis for installation documentation and confirmation of application suitability.