BM3-4303-0004

Metal cable reel (with thermal protection)

Product code: BM3-4303-0004

IP rating	Socket option
IP44	**with sockets**



Specification	Value
Product code	BM3-4303-0004
Barcode	8698523931257
IP rating	IP44
Housing material	0,8mm cold-rolled steel sheet
Socket option	with sockets
Cable option	without cable
Cable capacity	50m. cable capacity
Cable type	3x2,5mm
Weight (g)	2713
Box quantity	1
Carton quantity	1

Technical drawing

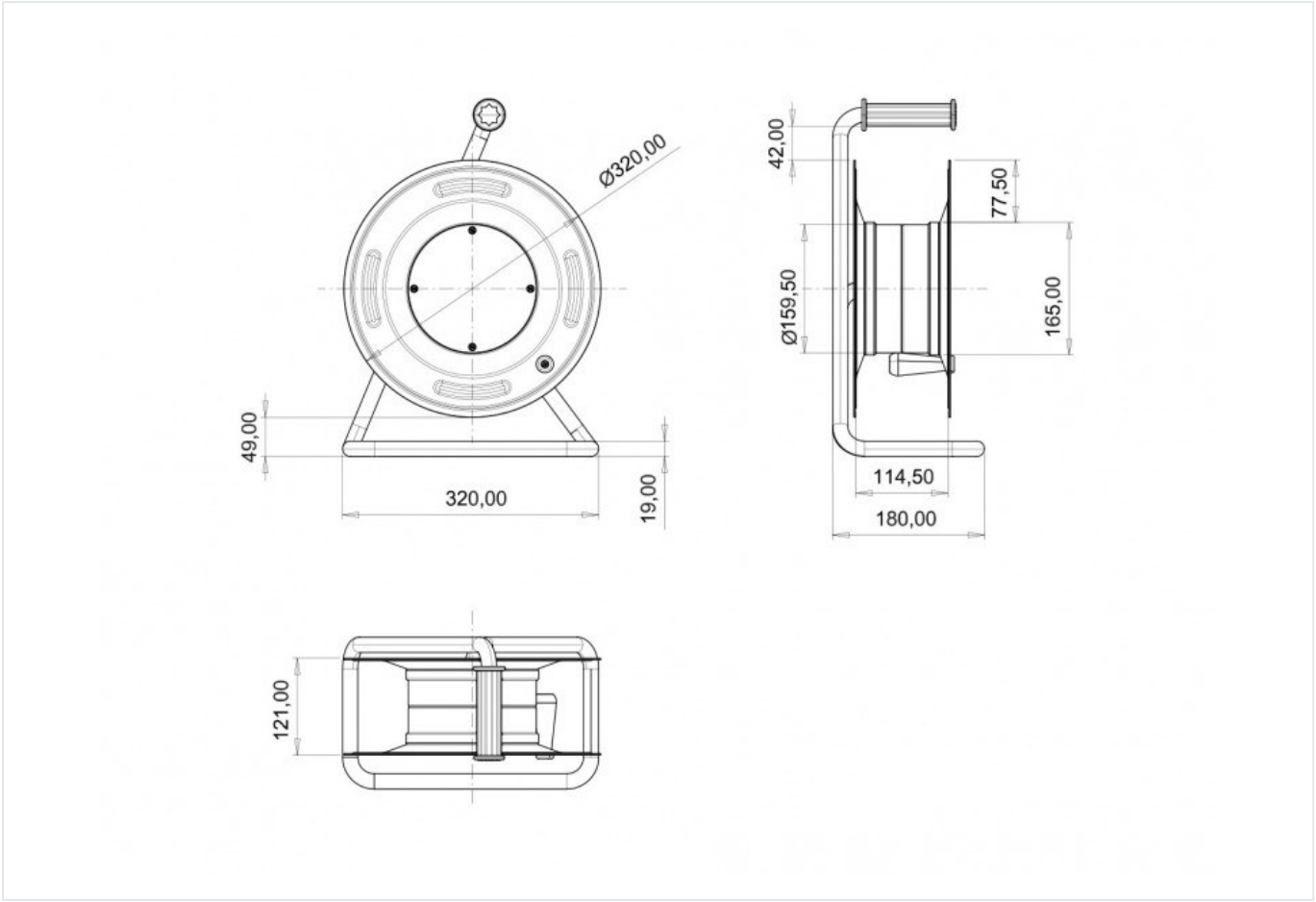

Technical values reflect the current product catalogue. Contact Bemis for installation documentation and confirmation of application suitability.