BB3-2231-0097

# Aluminium junction box (80x130x73)

Product code: BB3-2231-0097

| IP rating | Material |
|---|---|
| **IP67** | **aluminium** |



| Specification | Value |
|---|---|
| Product code | BB3-2231-0097 |
| Barcode | 8698523931011 |
| IP rating | IP67 |
| Material | aluminium |
| Colour | grey |
| Lid type | Aluminium lid |
| Weight (g) | 431 |
| Box quantity | 1 |
| Carton quantity | 35 |

## Technical drawing

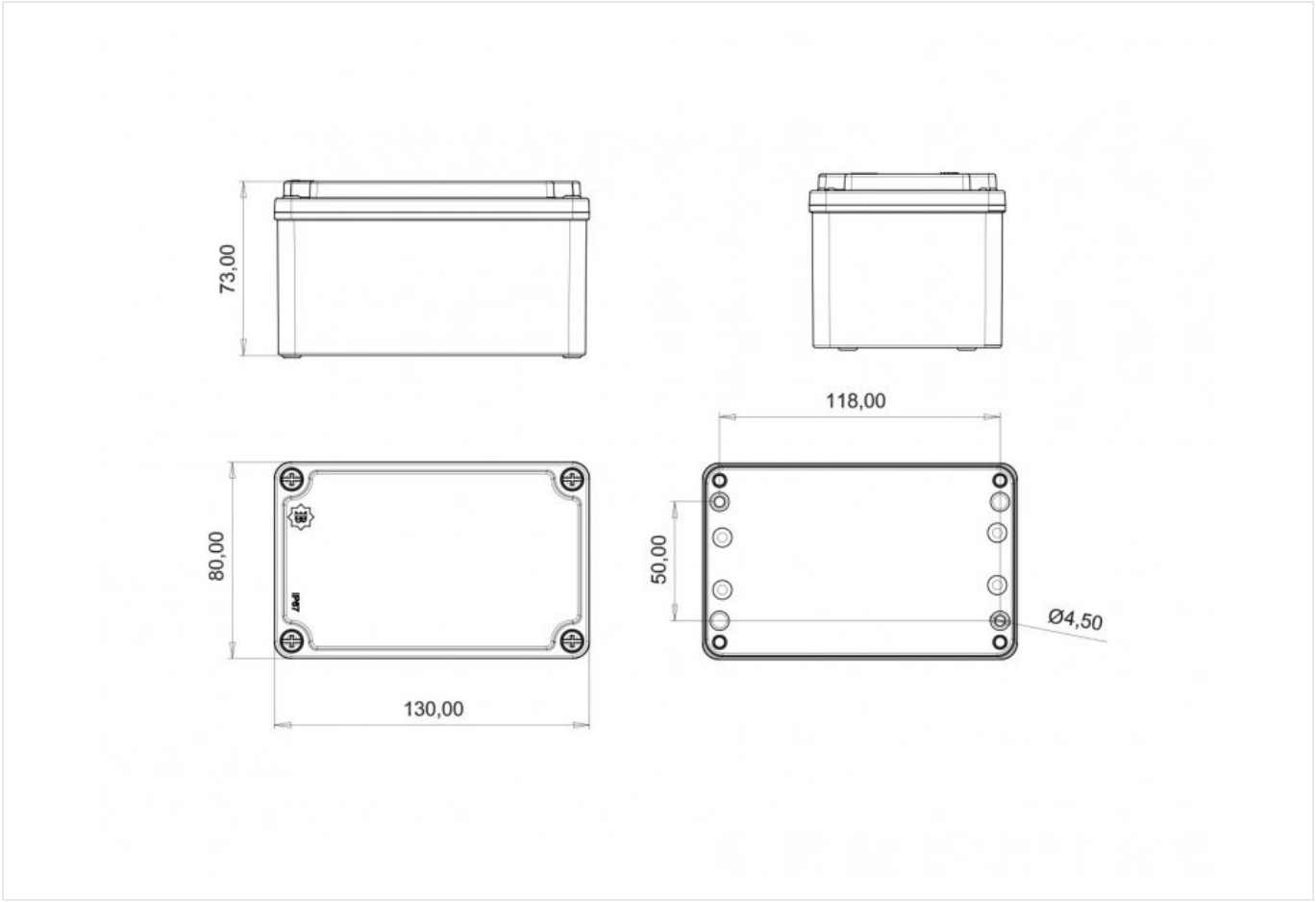


Technical values reflect the current product catalogue. Contact Bemis for installation documentation and confirmation of application suitability.