BH9-6214-2020

V15 combination unit

Product code: BH9-6214-2020

IP rating **IP66**	Material **ABS Halogen Free**
Socket option **with sockets**	Box quantity **1**

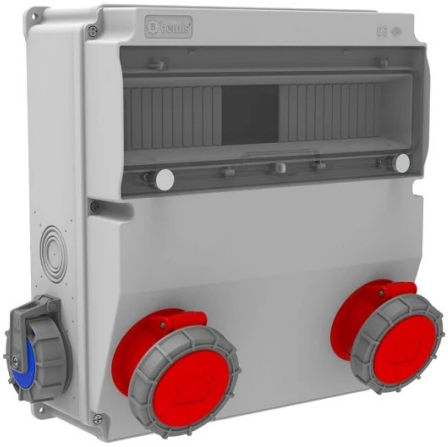

Specification	Value
Product code	BH9-6214-2020
Barcode	-
IP rating	IP66
Material	ABS Halogen Free
Socket option	with sockets
Weight (g)	-
Box quantity	1
Carton quantity	4

Technical drawing

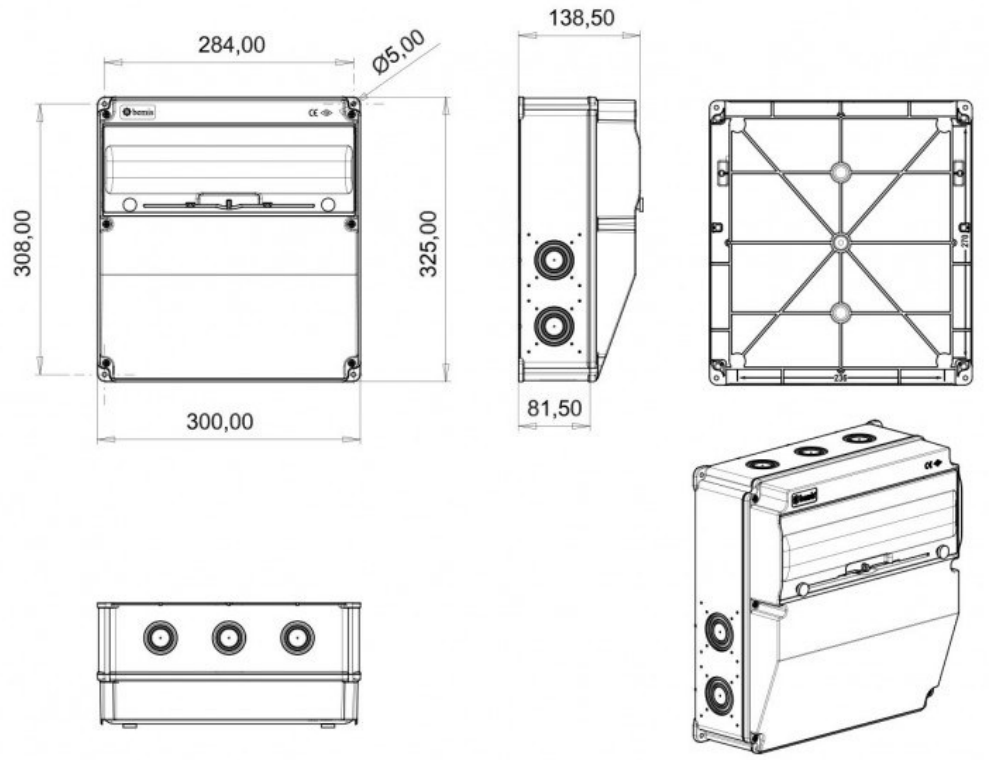

Technical values reflect the current product catalogue. Contact Bemis for installation documentation and confirmation of application suitability.