BB4-7183-8000

Aluminium combination unit

Product code: BB4-7183-8000

IP rating	Material
IP67	**aluminium**



Specification	Value
Product code	BB4-7183-8000
Barcode	-
IP rating	IP67
Material	aluminium
Socket option	with sockets
Weight (g)	-
Box quantity	1
Carton quantity	1

Technical drawing

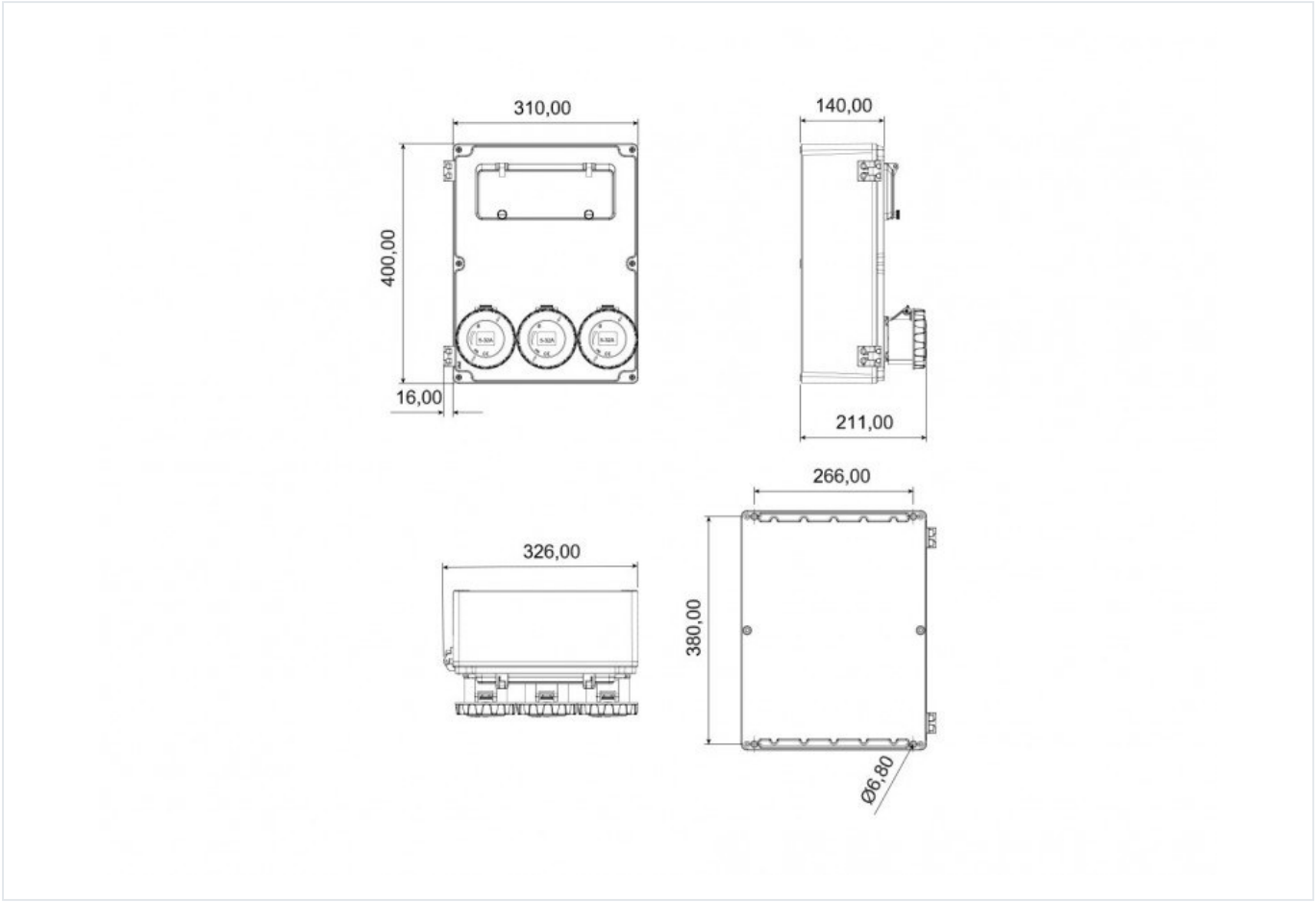

Technical values reflect the current product catalogue. Contact Bemis for installation documentation and confirmation of application suitability.