BB4-2182-8410

Aluminium combination unit

Product code: BB4-2182-8410

Barcode	IP rating
1	IP44



Specification	Value
Product code	BB4-2182-8410
Barcode	1
IP rating	IP44
Material	aluminium
Socket option	with sockets
Weight (g)	-
Box quantity	1
Carton quantity	1

Technical drawing

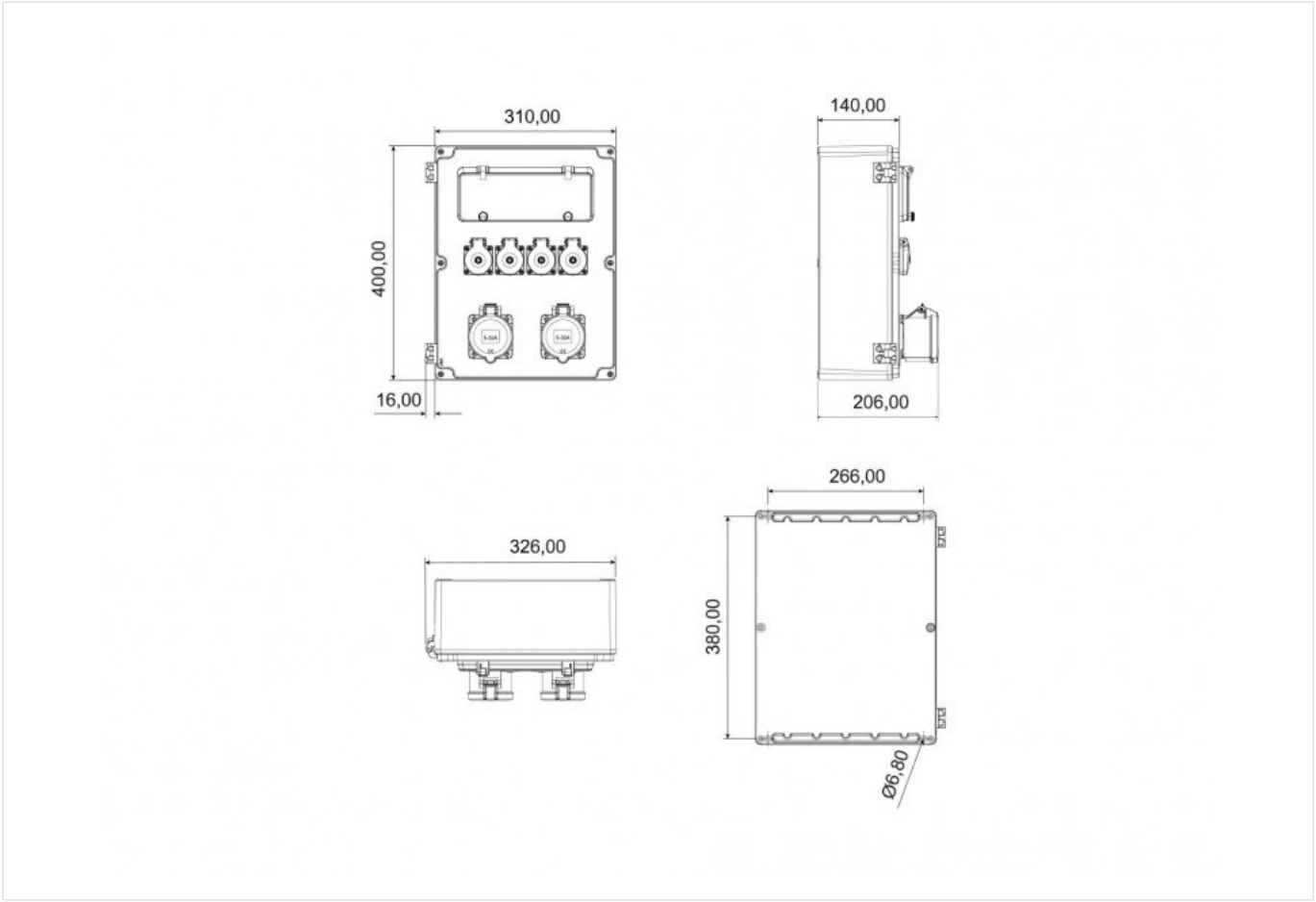

Technical values reflect the current product catalogue. Contact Bemis for installation documentation and confirmation of application suitability.