BH4-2134-2120

V17 Combination unit

Product code: BH4-2134-2120

IP rating **IP44**	Material **ABS Halogen Free**
Socket option **with sockets**	Box quantity **1**

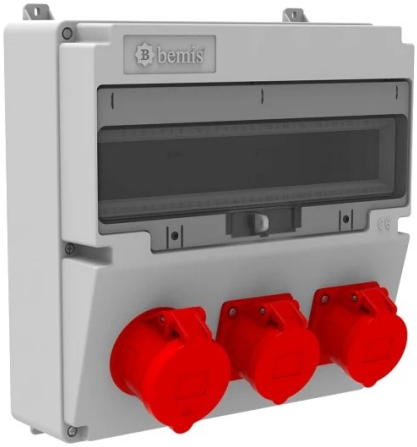

Specification	Value
Product code	BH4-2134-2120
Barcode	-
IP rating	IP44
Material	ABS Halogen Free
Socket option	with sockets
Weight (g)	-
Box quantity	1
Carton quantity	5

Technical drawing

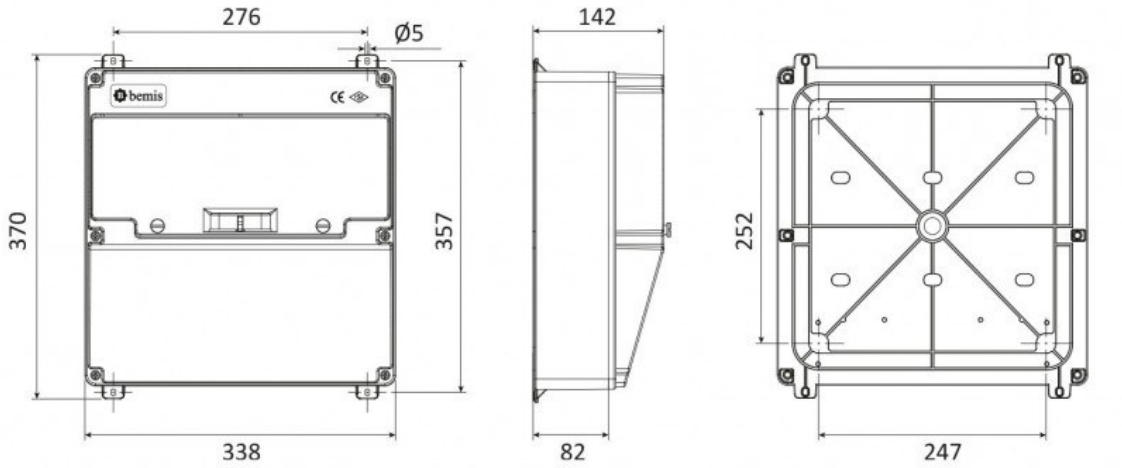

Technical values reflect the current product catalogue. Contact Bemis for installation documentation and confirmation of application suitability.