BD4-2318-2020

# V17 combination unit

Product code: BD4-2318-2020

| | |
|---|---|
| IP rating<br>**IP44** | Material<br>**ABS** |
| Socket option<br>**with sockets** | Weight (g)<br>**2545** |

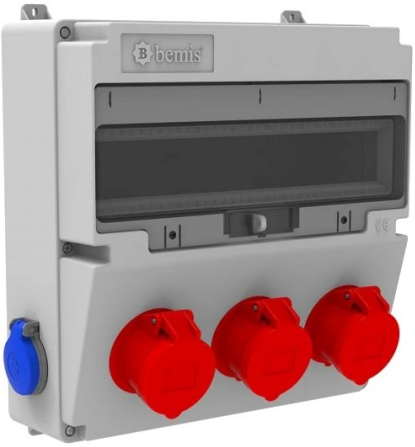

| Specification | Value |
|---|---|
| Product code | BD4-2318-2020 |
| Barcode | 8698523908815 |
| IP rating | IP44 |
| Material | ABS |
| Socket option | with sockets |
| Weight (g) | 2545 |
| Box quantity | 1 |
| Carton quantity | 5 |

## Technical drawing

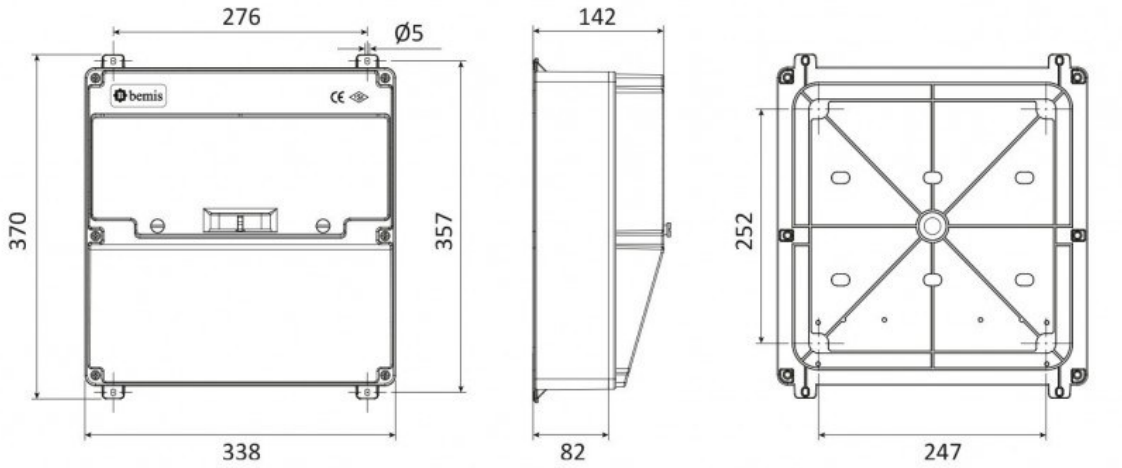


Technical values reflect the current product catalogue. Contact Bemis for installation documentation and confirmation of application suitability.