BD4-2305-2020

V17 combination unit

Product code: BD4-2305-2020

IP rating **IP44**	Material **ABS**
Socket option **with sockets**	Weight (g) **2447**



Specification	Value
Product code	BD4-2305-2020
Barcode	8698523908785
IP rating	IP44
Material	ABS
Socket option	with sockets
Weight (g)	2447
Box quantity	1
Carton quantity	5

Technical drawing

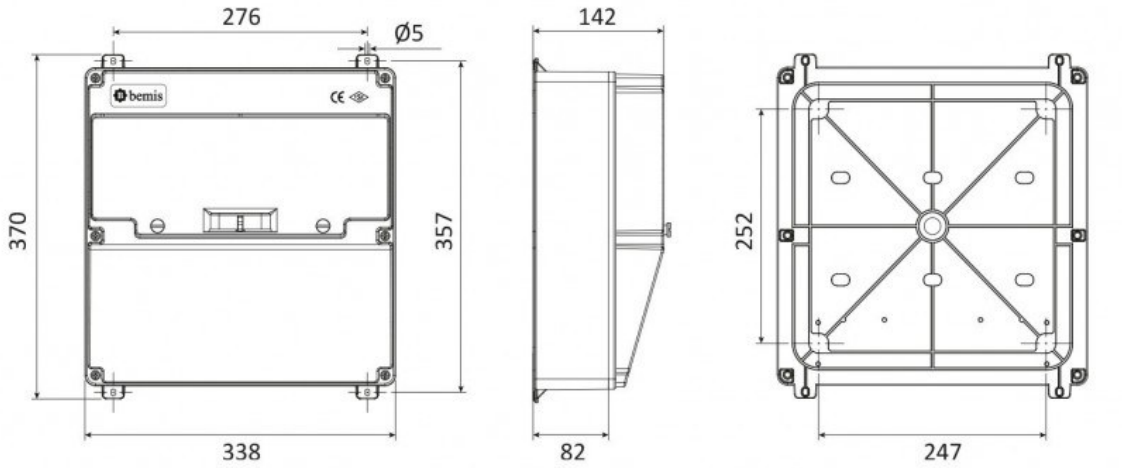

Technical values reflect the current product catalogue. Contact Bemis for installation documentation and confirmation of application suitability.