BX1-0222-0000

Polybox

Product code: BX1-0222-0000

IP rating **IP44**	Housing material **polyamide 6**
Conductor material **MS 58**	Socket option **with sockets**



Specification	Value
Product code	BX1-0222-0000
Barcode	-
IP rating	IP44
Housing material	polyamide 6
Conductor material	MS 58
Socket option	with sockets
Connection type	connected
Weight (g)	-
Box quantity	1
Carton quantity	6

Technical drawing

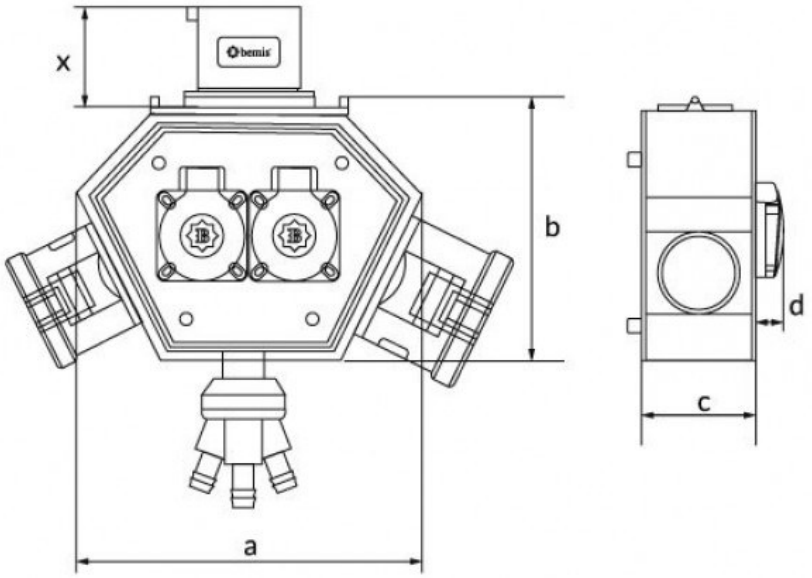

Ölçüler / Dimensions (mm) x			
a	188	3/4/5 - 16A Priz / Socket	46
b	148	3/4/5 - 32A Priz / Socket	57
c	86	3/4/5 - 32A Fiş / Plug	46
d	18	3'lü Hava Çıkışı / Air Outlet	90

Technical values reflect the current product catalogue. Contact Bemis for installation documentation and confirmation of application suitability.